RESERVE

D2.4 v1.0

Definition of ICT Requirements for Linear Swing Dynamic Operations, V1 (Original title)

Definition of ICT Requirements for Frequency Control, V1 (New title)

The research leading to these results has received funding from the European Union's Horizon 2020 Research and Innovation Programme, under Grant Agreement no 727481.

Project Name	RESERVE
Contractual Delivery Date:	31.03.2018
Actual Delivery Date:	31.03.2018
Contributors:	Steffen Bretzke (EDD), Miguel Ponce de Leon (WIT), Aysar Musa (RWTH), Lucian Toma (UPB), Conor Murphy, Sriram Gurumurthy, Álvaro Ortega Manjavacas (UCD), Federico Milano (UCD)
Work package:	WP2
Security:	PU
Nature:	R
Version:	1.0
Total number of pages:	XX

Abstract

This document is a report on the Information and Communications Technology Requirements for RESERVE. This document provides a summary of these requirements, as relevant for Frequency Control discussed in work package 2. The requirements are based on the scenarios identified in D2.3 for future 100% RES penetration. For voltage control, D3.6 will specify the ICT requirements on detailed level in RESERVE.

Keyword list

Information and Communications Technology Requirements, 100% RES Energy Networks, Frequency Control

Executive Summary

The title of this Deliverable (D) 2.4 changed from *Definition of ICT Requirements for Linear Swing Dynamic Operations, V1* to *Definition of ICT Requirements for Frequency Control, V1*. The reason is that this document will now cover all scenarios for frequency control in this project, and not just *Linear Swing Dynamics.*

This Deliverable (D) 2.4 presents the work of Task (T) 2.5, "Requirement on scalable ICT to implement frequency control concepts" within the wider context of Work Package (WP) 2 and RESERVE. WP2 focuses on the detailed analysis of the challenges and solutions for frequency control in general, and linear swing dynamics in particular. These topics are highly relevant in future energy networks with 100% renewable energy sources (RES).

The ongoing transition from conventional power generation, typically based on coal- and gas-driven plants, to renewable energy sources with a share of up to 100% is a major challenge especially for transmission and distribution system operators. They will need predictable power reserves in order to provide a reliable frequency control service. The current technologies for **wind turbines and photovoltaic power generation** do not ensure sufficient power reserves for frequency control, and do not generate the necessary amount of mechanical inertia to keep the frequency at stable levels.

Current network codes [2] recommend three levels of frequency control: primary (automatic, time reaction in seconds), secondary (automatic, time reaction from seconds to minutes) and tertiary (automatic, time reaction from minutes to hours). This project proposes introducing an additional type of control called *Inertial control*, with time reaction between 0.5 to 5 seconds. In deliverable D2.1, a Frequency Divider tool was proposed which can locally estimate the frequency. This allows for decentralized and distributed architectures for frequency control. A local or regional frequency control unit can be implemented based on the Frequency Divider to send control signals to small generation units or loads.

The first ICT requirements for Frequency (and Voltage) Control have already been presented in Deliverable D1.3. This document will now update and analyse the particular requirements for selected scenarios in Frequency Control.

Note the following deliverables in RESERVE will discuss further detailed aspects of ICT requirements for future energy systems, and suggest some solutions:

D2.5 Definitions of ICT Requirements for Frequency Control, V2

D3.6 Report on Requirements on Scalable ICT to implement Voltage Control Concepts

Advanced ICT concepts are needed to monitor and to control the network, by continuously collecting measurements from all parts of the network, and by quickly responding to any disturbances in the grid.

This deliverable includes an overview of the major stakeholders, the selected scenarios and their options in Chapter 2. This chapter also includes updated descriptions of the relevant concepts to be investigated by this project, as they are relevant for the ICT requirements.

On a detailed level, Chapter 3 presents each selected scenario variant on an individual and more detailed level, followed by a summary of the relevant ICT requirements for each variant. The ICT requirements are finally summarised in a table view in Chapter 4.

A stable frequency level is essential to prevent smart grids from disturbances or even outages. This deliverable shows that some scenarios have demanding requirements for high-performance, reliable, secure, and extremely fast communications networks, to ensure that the frequency control algorithms can instantly respond to any deviations in the grid. The number of energy generation units will grow drastically, and with it the number of end-points and control units in the network. Consequently, it is highly recommended to deploy future mobile networks for this challenging task, providing effective and cost-efficient solutions for the requirements discussed in this publication.

Authors

Partner	Name	Phone/ e-mail	
EDD			
	Steffen Bretzke	Phone:	+49 173 5431962
		e-mail:	Steffen.Bretzke@ericsson.com
WIT			
	Miguel Ponce de Leon	Phone:	+353 51302952
		e-mail:	miguelpdl@tssg.org
UPB			
	Lucian Toma	Phone:	+40 724 711 661
		e-mail:	lucian.toma@upb.ro

Table of Contents

1. Introduction

Renewables in a Stable Electric Grid (RESERVE) is a three-year project funded by the European Commission in the Work Programme Horizon 2020 – Competitive Low-Carbon Energy (LCE) 2016-2017. The project officially started in October 2016.

1.1 Task 2.5

This deliverable is the most relevant output of Task 2.5 in WP2. This task collects and analyses the requirements for scalable Information and Communications Technology for frequency control in energy systems with up to 100% RES. Under the framework of the control architectures and the system level requirements, corresponding ICT infrastructures will be required to quickly, reliably, and securely transmit wide-area field measurements and commands for the frequency management system. This task will elaborate further on these requirements of the ICT infrastructure.

1.2 Objectives of the Work Report in this Deliverable

- To provide a systematic analysis of the energy scenarios relevant for the simulations and field trials for frequency control from the ICT perspective;
- To provide the basis for future experimentation in RESERVE using simulation with communications systems as hardware in the loop;
- To provide the basis for investigating the potential role of new 5G-based ICT systems in supporting new management techniques in the power infrastructure;
- To establish a basis for providing input to 5G standardisation processes in relation to the requirements of the stakeholders as we move towards 100% RES;
- To contribute to the preparation of field trials in RESERVE;
- To provide the basis for investigating solutions necessary to the ICT requirements of the power sector in the 100% RES context;
- To investigate the most relevant data interfaces and coding implications of existing network codes in RESERVE on frequency as a basis for work on defining new harmonised network codes and potential modifications to existing codes.

1.3 Outline of the Deliverable

The present deliverable covers the revised version of the Information and Communications Technology Requirements Specification for selected scenarios of the Frequency Control domain. It was mainly defined by gathering relevant input from the ongoing research in work package WP2, Frequency Stability by Design. The document will describe these selected scenarios developed by the project, and present the ICT requirements for these scenarios, see Chapter 3 *below*.

1.4 How to Read this Document

This document can be read independently, but should the reader desire to learn about the details of the scenarios from the electrical point of view, the authors suggest reading deliverable deliverables D2.1, D2.2 and D2.3 in parallel.

Overall, this deliverable (D2.4) is related to the following documents from the RESERVE project:

- D1.3 ICT Requirements
- D2.1 Frequency Divider
- D2.2 Concepts of Primary and Secondary Frequency Control
- D2.3 Linear Swing Dynamics Validation and Application in Future Converter-Based Power Systems

The following figure summarised the workflow in Work Package 2, and the related input and output work packages.

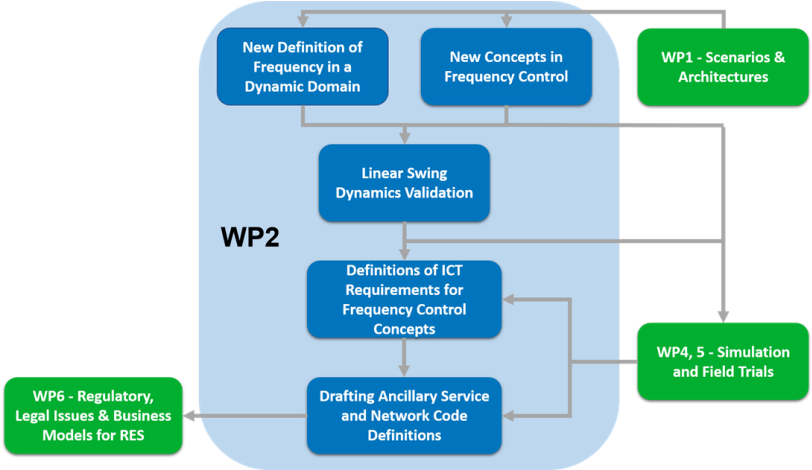

Figure 1-1: Workflow with Work Package 2

1.5 Approach Used to Undertake the Work

The following steps were iteratively applied to develop the results reported in this deliverable:

- A detailed investigation of the key scenarios selected in Work Package 2 was performed with the partners active in WP2 in the project.
- A categorisation of the options for the architecture of the scenarios was developed and used later as a basis for the ICT requirements definition.
- A categorisation of the ICT potential requirements was developed as the basis for the systematic analysis of the detailed energy scenarios.
- Conclusions regarding the key ICT requirements were developed. These requirements relate to the domains of voltage and frequency control respectively.
- In addition to requirements, D2.4 (and D3.5) will also list relevant ICT solutions for the requirements described.

2. Selected Scenarios and their Options

The technical and commercial aspects of power networks are evolving rapidly. New services, new technologies, new stakeholders, and new business models emerge, and the industry will face continuous evolution of these aspects in the coming years.

2.1 Sector Actors in Future Energy Networks

The following paragraphs give short descriptions of the most prominent sector actors in Energy Networks for the next ten years.

Transmission System Operator (TSO): a legal actor responsible for operating, maintaining, and developing the transmission system in a country or a certain region of the country. The TSO is responsible for trading power with the neighbour countries. The *Grid Code* [4] is the technical document which establishes the rules governing the operation, maintenance and development of the transmission system and sets out the procedures for governing the actions of all transmission system users. International cooperation between TSOs is defined in minimum requirements by the EU, in a guideline on electricity transmission system operation [5].

Distribution System Operator (DSO): a legal actor responsible for operating, maintaining, and developing the distribution systems in a given area, and its connections with other systems. The DSO aims to balance reasonable demand and supply of energy, and thus maintain a stable grid. The *Distribution Code* [3] describes the technical aspects of the relationships between the DSO and all other users of the distribution system.

Virtual Power Plant (VPP): VPP is a system that integrates several types of power sources, such as wind-turbines, small hydro, photovoltaics, back-up gensets, and batteries, so as to give a reliable overall power supply. The sources are often a cluster of distributed generation systems, which are typically orchestrated by a central authority.

Aggregator: the commercial aggregator (CA) receives forecasts for demand and distributed energy sources (DERs), regarding the load area which it has been assigned to. Forecasts and demand are available at the CA data exchange platform. The CA formulates the offers for flexibility services and energy production/consumption for its load areas, and then sends the offers to the market operator. Consequently, after receiving the schedules for the DERs, once the market clearing and validation phases have been completed, the CA forward the schedules to the corresponding DERs.

Prosumer: in the past, the role of energy consumer and energy supplier was clearly separated. With the advent of renewable energy generation, that is no longer the case. An increasing number of private and commercial consumers are also operating photo-voltaic generation equipment, and wind turbines whose energy will be injected into the local smart grid.

Microgrids: they comprise Low-Voltage (LV) distribution systems with DERs (microturbines, fuel cells, photovoltaics (PV), etc.), storage devices (flywheels, batteries), energy storage systems, and flexible loads. Such systems can be operated in both non-autonomous way (if interconnected to the grid) or in an autonomous way (if disconnected from the main grid).

2.2 Frequency Control Scenarios

The most critical application of grid stabilisation deals with *frequency control*. This application is performed in different time frames, with different network components and architectures, and with two different approaches labelled Sf_A, Mixed Mechanical-Synthetic Inertia, and Sf_B, Full Synthetic Inertia. For scenario Sf_A, the only synchronous energy generation is hydro power plants, thus reaching the objective of grids with up to 100% RES.

In frequency control, the project will study the impact of having 100% RES at *three* different time scales.

2.2.1 Time Scales in Frequency Control

The time limits in the following sections are approximated. The aim is to reduce these time frames in the mid-term future. Frequency control using hydro power for stabilisation, as in scenario Sf_A, is slower, while purely synthetic inertia scenarios as Sf_B will be faster.

2.2.1.1 Inertial Control

The inertial control aims to provide the virtual inertia, at the instance of disturbance, that contributes to a decreasing rate of change of frequency (RoCoF), to be maintained within the

applicable thresholds. Inertial control provides frequency stabilisation in periods of less than 5 seconds, additional layers may be added within RoCoF reducing the time window to much less than 5 seconds, to probably approx. 1 second; this point needs more study in the project. Architectures likely to be used are decentralized and distributed control schemes.

2.2.1.2 Primary Control

Primary control is executed in periods of about 5 to 30 seconds, additional layers may be added in primary frequency control reducing the time window available for reaction due to the fast dynamics of the system; this point needs more study in the project. Primary control is based on decentralized or distributed architectures, see below. The dimensioning of the power reserves in the two primary control options is important and is the factor which enables the decision to be made on whether an energy resource is managed using decentralized or using distributed primary control.

Primary control will use the frequency containment reserve in the network.

2.2.1.3 Secondary Control

Secondary frequency control balances the frequency in periods of over 30 seconds up to 15 minutes. Some countries may have other definitions of secondary control time frames. Common, international time frames will be needed for deployment of technical measures across the European Union. A key factor for improving secondary control is the creation of control loops covering several countries or for regions. Secondary control in different countries is currently organised per country, except for Spain and Portugal which have an organised collaboration for secondary frequency control. Architectures likely to be used to implement secondary control are central control schemes; see section 2.2.2.1 below.

Secondary control will use the frequency restoration reserve in the network.

Consider Figure 2-1 below. Frequency f_o is the target (nominal) value, such as 50 Hz. When the disturbance sets in, *Inertial Response* or *Inertial C*ontrol is the first counter measure, see red line labelled "RoCoF" in the image. *Inertial response* means synchronous generation, while *Inertial Control* refers to synthetic power converter-based generation. Primary control is the second step which stabilizes system frequency by balancing the power generation and demand. The primary control should ensure that the frequency reaches at least minimum threshold value f_{ss} again (green dashed line). The third step, finally, is secondary control which aims to raise/ lower the frequency back to the target value over time in case of under/over frequency problem, respectively.

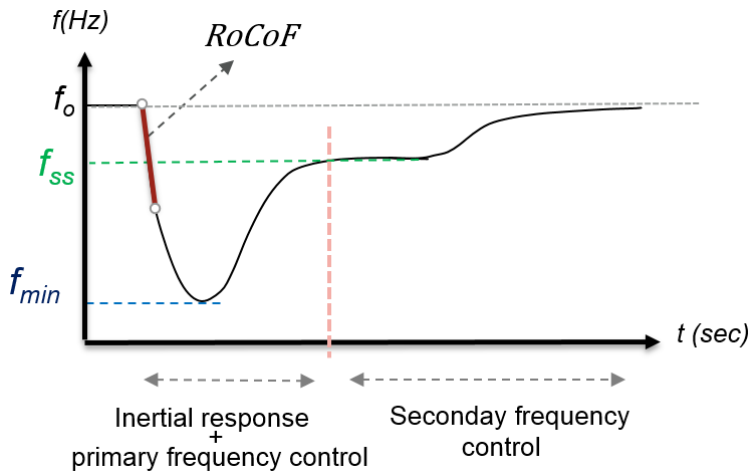

Figure 2-1: Time scales of frequency control

2.2.2 Control Architectures in Frequency Control

2.2.2.1 Centralized Architecture in Frequency Control

Centralized control of all RES sources is needed to create awareness of the status of frequency in the system as a whole. Its drawback is the slower reaction times, as it requires communication with a central control centre which distributes target frequency values for the controllers in the distributed energy resources. In large networks, communications latency is the main latency

factor. Communications links need to be installed between all RES sources and the control centre of the local DSO, which is in turn connected to the control centre of the TSO.

The frequency data analysis, and the stabilisation algorithms, are carried out by the local elements in the DSO controlled by a power converter.

2.2.2.2 Decentralized Architecture in Frequency Control

In *Centralized Architecture* above, the remote units receive a target frequency value from the DSO frequency control unit. This step is omitted in the *Decentralized Architecture*. Here the power converters only use locally available information, and this offers an improved quality as it is based on the average values for the local part of the grid.

Decentralized primary control is independent and automatic. Mixed signals, consisting of both RoCoF and the amount of the change of frequency, abbreviated as Δf, can be used in primary control level to allow faster reserve deployment with implicit inertial response.

Controlling the frequency locally will require fewer communications in this architecture. However, for security purposes, each energy source or storage device, every prosumer and each DC grid controller may be connected to the central control room of the DSO to monitor the correct and reliable operation of the systems.

The decentralized architecture is mainly used for prompt response to frequency variations, i.e. in inertial control and in primary control.

2.2.2.3 Distributed Architecture in Frequency Control

In a distributed control strategy as proposed by RESERVE, the DSO frequency control centre collects the local frequency measurements from the DERs and computes the average of these values. This average value is then sent to every power converter in the remote units of the distribution grid.

2.2.3 Two frequency control scenarios in RESERVE: Sf_A and Sf_B

This project investigates two different frequency control scenarios which are compared in the following sections.

2.2.3.1 Sf_A – Mixed Mechanical-Synthetic Inertia

For 100% RES, this scenario combines the use of mechanical inertia from hydro and geothermal power units with renewable energy sources such as photovoltaics and wind turbines. Therefore, the focus of this scenario is on high and medium voltage networks. PV and wind turbines require synthetic inertia to balance the frequency in the network.

In addition, the scenario will include the investigation of demand-side control aspects, where the DSO is able to stabilize the grid by controlling the energy balance of the load (consumers) and prosumers in the network. This approach is suitable for smaller grids.

2.2.3.2 Sf_B – Synthetic Inertia

This scenario will focus on energy production with 100% provided by non-hydro renewable energy sources, i.e. photovoltaics and wind turbines. Hence, there is no mechanical inertia in the energy production. Instead, synthetic inertia is provided by e.g. energy storage systems (ESSs) such as batteries. Due to the very high deployment of offshore wind farms in Europe, High Voltage Direct Current (HVDC) grids will be integrated into the AC networks to deliver and share the bulk power generated from the offshore wind farms. Also, the HVDC grids will play a significant role in exchanging the power between national and international areas for balancing energy and frequency stabilization purposes.

Due to the fully converter-interfaced system generation, the very fast system dynamics will result in a reduced time window for the frequency control categories (inertial, primary, secondary), and additional control layers will be most likely integrated into the existing frequency control categories.

As detailed in deliverable D2.3, the concept of Linear Swing Dynamics (LSD) will be developed in the control of RES converters, including the control of energy storage devices. This will result in a linear dynamical system and provide significant features in system stability analysis, frequency regulation and control. However, the applicability of LSD in a system with limited mechanical inertia, i.e. scenario Sf_A, is still to be studied by the project.

2.2.3.3 Comparison between Sf_A and Sf_B

The main differences between Sf_A and Sf_B scenarios are provided in the following table.

Table 2-1: Comparison between Scenarios Sf_A and Sf_B

Aspects	Frequency Control Scenario	
	Sf_A	Sf_B
System Generation	Mix of Hydro, geothermal, wind and PV power plants	Wind and PV power plants
System inertia	Mixed mechanical and synthetic (virtual) inertia	Fully synthetic (virtual) inertia
Inclusion of DC technology	Fully AC network	Hybrid AC/DC network
System dynamics	Slower dynamics due to the mechanical dynamics from existing synchronous generation	Very fast dynamics due to fully converter-connected network generation
Linear-Swing Dynamics (LSD)	Application of LSD in Sf_A needs further research, and will be discussed in future deliverables including D2.5.	Applicable for all RES-interfaced converters
Control time window	Same as today's (ENTSO-E) time frames	Reduced time windows, and probably additional control layers will be inclded

The table shows the main differences between Sf_A and Sf_B in terms of system generation, inertia, dynamics and control time window. In addition, a very fast and reliable communication is more critical in Sf_B than in Sf_A.

It is worth mentioning that there is no difference in the control architecture between Sf_A and Sf_B. In other words, both scenarios could have decentralized and distributed frequency control for inertial and primary time frames, and centralized control for secondary time frames.

2.3 Selection

The following table lists the selected combinations of the frequency control scenarios and their key parameters in this project. The selection is based on relevance regarding ICT requirements.

Selected Scenarios Frequency Control

Id	TSO DSO	Time Aspect	Type	Time	Central-ised	De-centralised	Distri-buted	Comment
S1	DSO	Primary control	Sf_A	< 30 sec		☑		Reference system – base for comparing scenarios
S2	DSO	Primary control	Sf_A	< 30 sec	☑			
S3	DSO	Primary control	Sf_A	< 30 sec			☑	
S4	DSO	Secondary control	Sf_A	< 15 min	☑			
S10	TSO	Inertial Ctrl [RoCoF]	Sf_B	< 1 sec		☑		Virtual inertia, LSD-VSG + ESS
S11	TSO	Secondary control	Sf_B	< 1 min			☑	Virtual inertia, LSD-VSG + ESS

Note: the time limits are current expectations and requirements, difficult to provide hard limits for 10 years or beyond. Future solutions will work better in case of even faster Inertial Control.

Figure 2-2: Selected Scenarios for Frequency Control

2.4 Applicable Standards

The IEC 61850 suite of standards defines applicable protocols for intelligent electronic devices at electrical substations. [6] It is a part of the International Electrotechnical Commission's (IEC) Technical Committee 57 reference architecture for electric power systems. The abstract data models defined in IEC 61850 can be mapped to a number of protocols. Current mappings in the standard are to MMS (Manufacturing Message Specification), GOOSE (Generic Object Oriented Substation Event), SMV (Sampled Measured Values), and soon to Web Services. These protocols can run over TCP/IP networks or substation LANs using high-speed switched Ethernet to obtain the necessary response times below four milliseconds for protective relaying.

For this project, the standard in part 7-420 is of particular interest, it addresses communication networks and systems for power utility automation, titled “7-420: Basic communication structure - Distributed energy resources logical nodes”. [7]

3. Scenarios and ICT Requirements

This chapter describes the scenarios so that the resulting ICT requirements can be presented in more detail. In frequency control, each scenario has various alternatives, which are listed and described as well.

Today, primary frequency control is operated locally by the synchronous power plants connected at the transmission system level. This deliverable shows the future integration of the Distribution System (DS) into primary frequency control schemes. The document describes and compares different methods to provide the frequency signal to the regulators of the DERs connected at the DS level.

Note that the terms “Centralized”, “Decentralized” and “Distributed” do *not* refer to control strategies, but rather, to the approach to retrieve the frequency signal used as input of the DER frequency regulators. For Scenarios S1, S2 and S3, the primary control of the frequency is done *locally* by each DER, similarly to the primary frequency control of conventional synchronous power plants.

3.1 Scenarios without Linear Swing Dynamics

The following three scenarios combine power generation units with some mechanical inertia as in hydro power plants, and wind turbines and solar plants which lack such inherent inertia. There is no need for virtual inertia injected by Linear Swing Dynamics in these scenarios. In Sf_A the distribution networks include DERs, and other components controlled by means of power converters, such as ESSs, thermostatically controlled loads, and other frequency-dependent loads.

The following three scenarios are examples of frequency control in MV distribution networks.

3.1.1 S1 Low Mechnical Inertia, Sf_A, Primary Control, De-centralized

This scenario is used as basic reference scenario for later comparisons with the other scenarios.

All DERs using individual Phase-Locked Loop (PLL) signals. Each one of these signals shall be characterized by a certain level of latency and noise. There is **no** central unit for gathering the frequency signals from the DERs. Therefore, there is no need for any advanced communications network. The frequency regulation is executed independently by the **inverters** or **VSC** devices included in the DER units. Only local measurements are considered in frequency here.

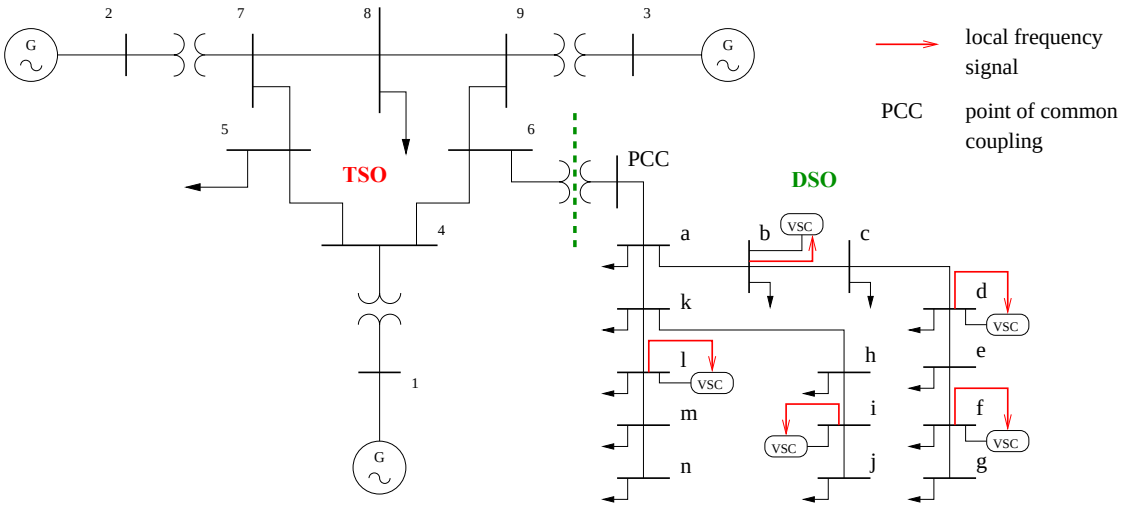

Figure 3-1: De-centralized primary frequency control provided by the Distribution System

3.1.2 S2 Low Mechanical Inertia, Sf_A, Primary Control, Centralized

This scenario uses a central DSO frequency data manager located at the Point of Common Coupling (**PCC**) with the transmission system, and data is distributed by means of 5G to all DERs inside the DS. This **frequency data manager** is shown as a **red box** in the diagram, Figure 3-2. Different methods to retrieve this frequency signal will be studied.

This frequency data manager is responsible for gathering the measurements from the PCC bus, and then distribute this value to each frequency control device at the distribution system side.

This device is the **inverter** or **VSC** (voltage-sourced controller) typically included in DER units. The target frequency value is the frequency measurement taken from the PCC busbar. The DER controllers locally take the needed actions.

The frequency data manager can be part of the Secondary Substation Automation Unit (SSAU). There are two types of phasor measurement units (PMU) for measuring the frequency at the PCC, as follows.

Types of Frequency Controllers

- **Ideal PMU** – the frequency at the PCC will be measured using an ideal PMU model, i.e., free of latencies and noises. To this aim, the Frequency Divider Formula (FDF) without latency can be used, as described in deliverable D2.1.
- **Real PMU** – the frequency at the PCC will be measured by means of a PMU device using Hardware in the Loop (HiL).

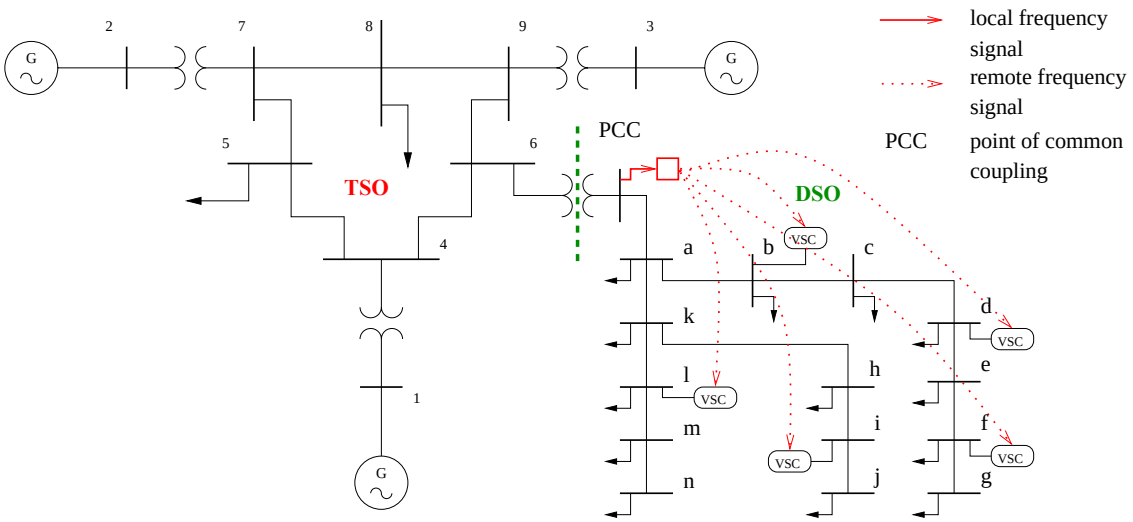

Figure 3-2. Centralized primary frequency control provided by the Distribution system

3.1.3 S3 Low Mechanical Inertia, Sf_A, Primary Control, Distributed

In Figure 3-3, the *frequency data manager* is represented by the **red box** shown to the right of the PCC in the DSO grid. The data manager collects *all* PLL/PMU measurements, rather just the one from the PCC busbar, and then averages the frequency measurements. The data manager sends the resulting signal back to every **VSC** controller. The control actions are determined locally by the VSC controllers, such actions depend on the frequency signal sent by the frequency data manager. In that sense, the frequency control is *distributed*.

The **input** signal of the DER regulators in Figure 3-3 is the averaged frequency of all PLL measurements of the DERs. Then, the control centre distributes back this average value by means of 5G to all DERs inside the DS. The project will study different methods to determine the value of this frequency signal:

Averaged PLL signal – At the DS level, the signals of all PLLs (local VSC controllers), each one characterized by a certain level of latency and noise, will be collected by the frequency data manager, ie the red box in Figure 3-3. In other words, the **VSCs** converters send these frequency signals from the PLLs to the DSO frequency data manager (red box). This frequency data manager should be co-located with the Distribution Management System (DMS) of the DSO.

The central DS frequency data manager computes the average frequency of the PLL signals to reduce noise and spikes from the measurements. The frequency data manager then distributes the average value as common signal to each DER.

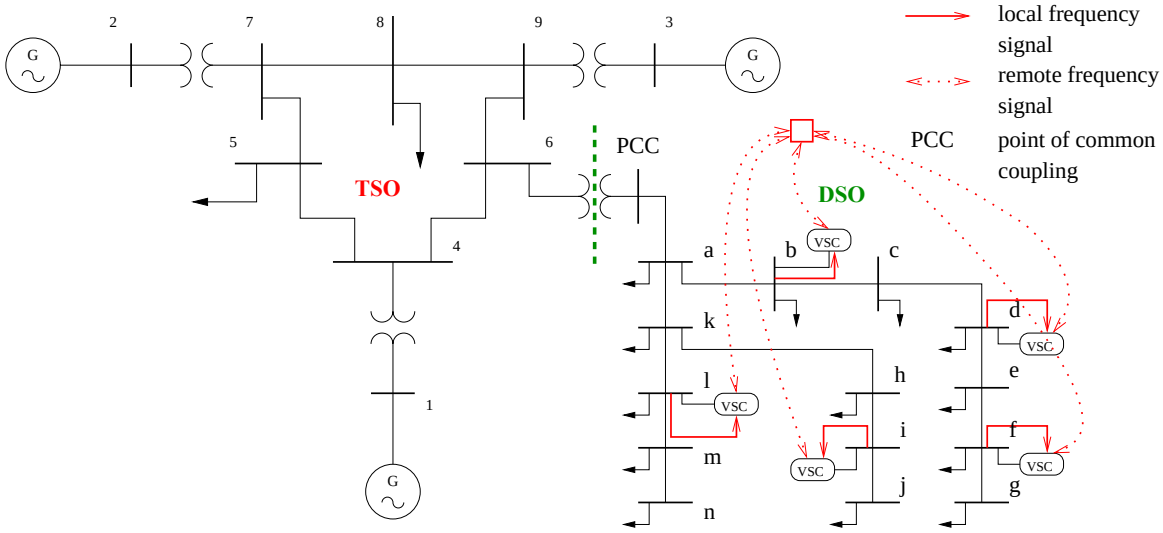

Figure 3-3. Distributed primary frequency control provided by the Distribution system.

3.1.4 S4 Low Mechanical Inertia, Sf_A, Secondary Control, Centralized

In this scenario, the DSO will participate in the Secondary Frequency Control (2FC) at the transmission system level. This control will be contemporary to the conventional 2FC provided by the automatic generation control by the TSO.

Communication in this scenario is on two levels:

- In the transmission grid, the communication link connects the “secondary frequency controller” in the transmission grid, and the central DSO frequency data manager (red box in Figure 3-4).
- In the distribution grid, the communication link is between the DSO frequency data manager (red box) and the VSC controllers in the Distribution System.

Note: The “secondary frequency controller” (2FC) is a component of the TSO’s Energy Management System (EMS).

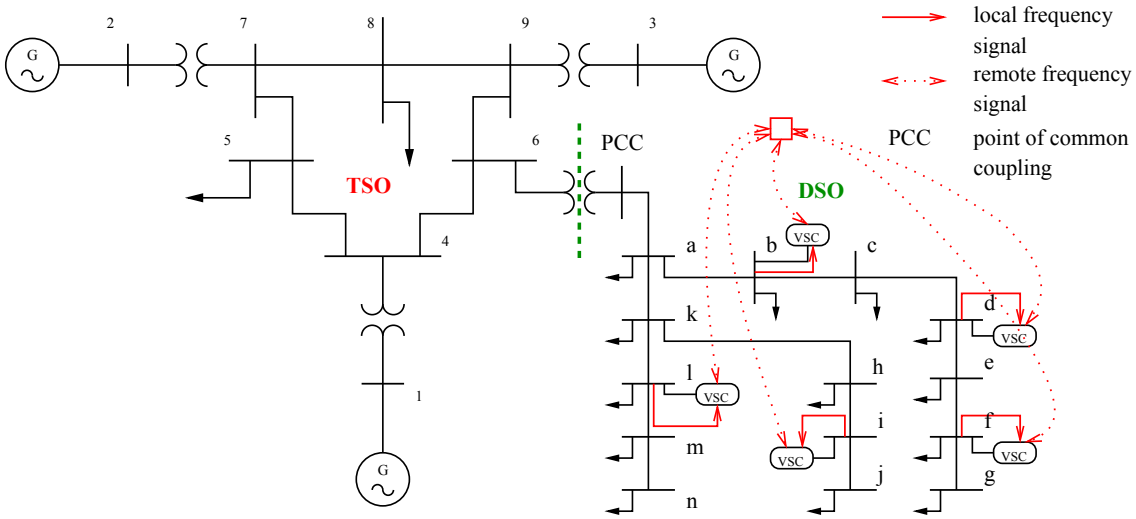

Figure 3-4. Secondary frequency control provided by the Distribution system

3.2 Frequency Control Scenarios with Linear Swing Dynamics

The following two scenarios study zero-inertia power systems, where all power generation is based on renewable energy sources controlled by Linear Swing Dynamics (LSD) implemented in

Virtual Synchronous Generators (VSG). The aim of LSD-VSG is to replace mechanical inertia with virtual inertia in order to stabilise the frequency on inertial, primary, and secondary control levels. The solution of LSD-VSG can be used in both transmission and distribution networks, even with HVDC connections.

In realistic, future scenarios, the RES units need connections to energy storage systems (ESS). Only these scenarios are considered in the sections below. Both scenarios belong to the Sf_B type, as they do not rely on any form of mechanical inertia.

3.2.1 S10 LSD and Virtual Inertia, Inertial Control, Decentralized Topology

Inertial control is particularly relevant for studying ICT solutions, as they have the tightest latency requirements, see below. In scenario **S10**, inertial control will be implemented in a decentralized control architecture.

In particular, **S10** considers:

- Inclusion of **storage control and dynamics** in the LSD-VSGs
- **Decentralized inertial + primary control** in the LSD-VSG
- **Coordinated** control will be investigated in the three LSD-VSGs

The aim of this scenario is to test and validate the LSD-VSG control and performance, respectively, with more realistic and sophisticated representation of energy sources, using renewable energy sources and ESS. This will enable future grids to operate at stable frequency levels with sufficient levels of **virtual inertia**.

The objective of this scenario is to maintain and enhance the developed LSD-based control architecture that achieves the transition of RES-tied converters from **grid-supporting** to **grid-forming** mode.

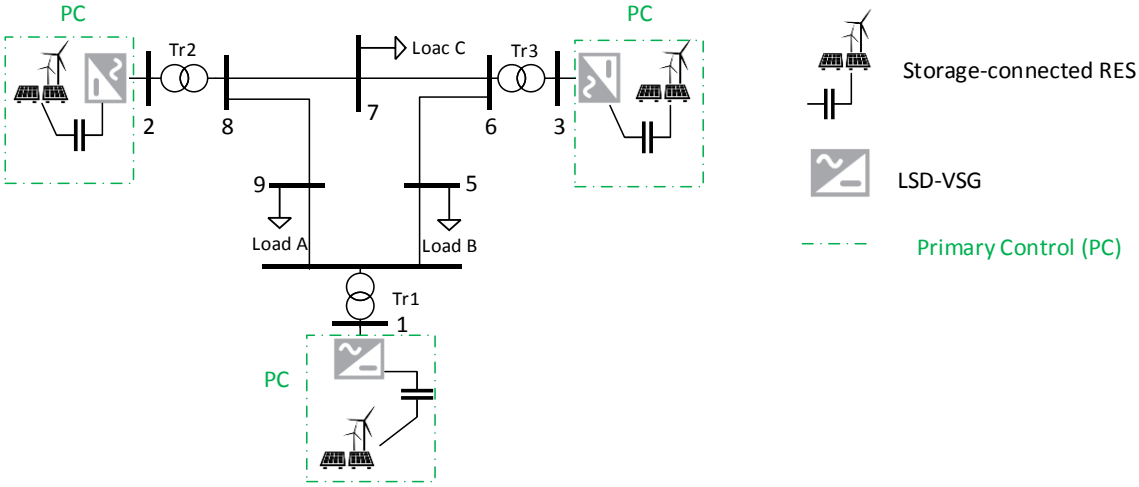

Figure 3-5. Storage-connected LSD-VSG in 9-bus system

In this decentralized architecture, the local inverters (LSD-VSG) receive very frequent frequency target values from the frequency data manager of the DSO.

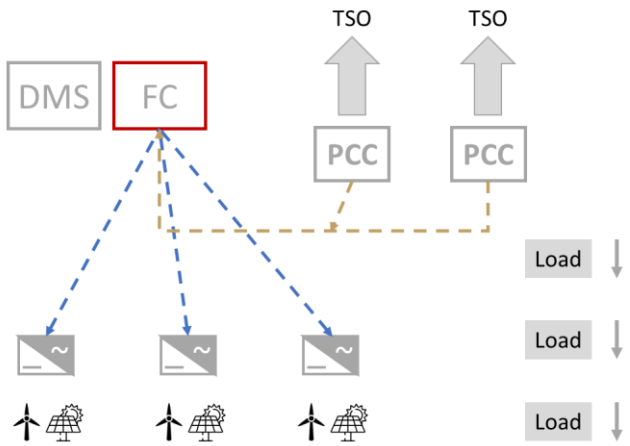

Figure 3-6. Mobile communication links in a distribution network

In distribution networks, mobile networks such as 5G telecommunications would be used for communications. All units with frequency measurement devices would share their values with the DSO frequency data manager (FDM), which would be located close to the distribution management system (DMS). Frequency measurement devices would be located at the PCC for the TSO connection, and at the LSD-VSGs of the renewable energy sources.

In S10, the frequency control is performed by each VSG unit, and the individual inverters can perform the *inertial frequency control* independently of the central DSO frequency data manager. There is no need to connect the normal load units in the distribution network, as they would not need LSD-VSG devices either.

3.2.2 S11 LSD and Virtual Inertia, Secondary Control, Distributed Topology

Secondary frequency control is relevant for studying ICT solutions, as they have the largest need for gathering and analysing frequency data by the central frequency data manager, see below. In scenario **S11**, secondary control will be implemented in a distributed control architecture.

In particular, **S11** considers:

- Inclusion of **storage control and dynamics** in the LSD-VSGs
- **Distributed secondary control** in the central frequency data manager, with execution of corrections by the local LSD-VSG
- **Coordinated** control will be investigated in the three LSD-VSGs

As for S10, the aim of this scenario is to test and validate the LSD-VSG control and performance, respectively, with more realistic and sophisticated representation of energy sources, using renewable energy sources and ESS. This will enable future grids to operate at stable frequency levels with sufficient levels of **virtual inertia**.

The objective of this scenario is to maintain and enhance the developed LSD-based control architecture that achieves the transition of RES-tied converters from **grid-supporting** to **grid-forming** mode.

In the distributed architecture in **S11**, the local inverters (LSD-VSG) send their measurements at regular intervals to the frequency data manager (FDM). The inverters frequently receive frequency target values from the frequency data manager of the DSO.

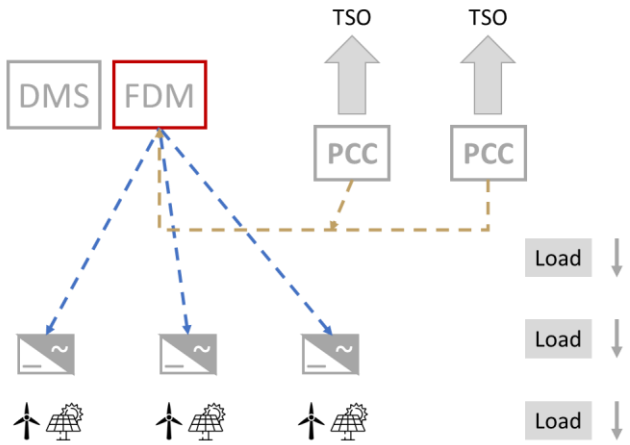

Figure 3-7. Mobile communication links in a distribution network

In distribution networks, mobile networks such as 5G telecommunications would be used for communications. All units with frequency measurement devices would share their values with the DSO frequency data manager (FDM), which would be located close to the DMS. Frequency measurement devices would be also located at the PCC for the TSO connection, and at the LSD-VSGs of the renewable energy sources.

In S11, the frequency analysis is performed by the central frequency data manager close to the DMS, and the individual inverters perform the *secondary frequency control* based on the instructions of the central DSO frequency data manager.

3.3 Summary of ICT Requirements for Frequency Control

The following table shows the selected scenarios for frequency control and their ICT requirements.

Scenario S1

Scenario S1 described in chapter 3.1.1 above is omitted in the following table, as it does not use any communications network. Consequently, the number of connection points is 0 for S1, and the frequency of communications is also 0.

Scenarios S2 – S11

The scenarios are described in the previous sections. The footnotes are explained at the bottom of the table.

Scenario	S2	S3	S4	S10	S11
Architecture	Centralized	Distributed	Centralized	De-central-ised	Distributed
Inertia	Mechanical inertia only from renewable energy, such as hydro power.			No mechanical inertia, only virtual inertia (Sf_B)	
Time Aspect	Inertial/ Primary	Inertial/ Primary	Secondary	Inertial	Secondary
Communications	Mobile networks between central control units and local power converters ← Very large number of remote devices in distribution network				
Connection Points	100 – 100,000 points per DSO including LSD-VSG, plus other sensors and control centres typical distance between LSD-VSGs and control centres 2 to 500 kms				
Frequency of Communi-cations [1)]	50 per second	50 per second	1 per second	50 per second	1 per second
Latency [2)]	Low (< 100 ms)	Low (< 100 ms)	High (≥200 ms)	Ultra Low (<50 ms)	High (≥200 ms)
Information reliability [3)]	Low (99.9%)	Medium (99.99%)	Medium (99.99%)	Medium (99.99%) to high (severe or catastrophic impact) (99.999%)	
Data volume [4)]	5000 Bytes	5000 Bytes	5000 Bytes	5000 Bytes	5000 Bytes
Security	Medium (serious impact)	Medium (serious impact)	Medium (serious impact)	Medium (serious impact) to high (severe or catastrophic impact)	Medium (serious impact)

Explanations

Important note: the values for the following parameters are realistic estimates, they need to be updated and confirmed in the second version of this deliverable after simulations and field trials have been conducted.

1) Frequency of Communications: how frequently do measurements need to be transmitted between sensors and control centres (or vice versa)?

2) Latency: transmission time for a measurement or control signal to be sent from point A to point B over the communications network. These times include the end-to-end transport of data over radio interface, processing in base station, transport over backhaul network, and processing in core network.

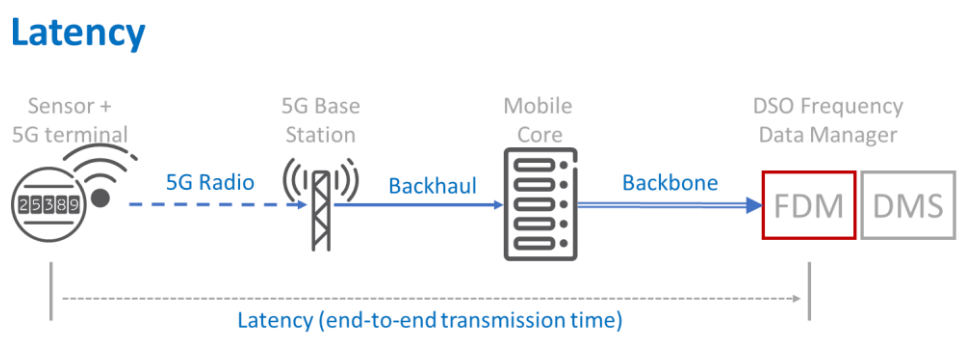

Figure 3-8: End-to-end Latency between two points in the communications network for frequency control in a distribution network

3) Information reliability measures the availability of the communications network. Typical values are 99.9, 99.99 or 99.999% availability. This means that the overall downtime including unplanned and planned downtime is not greater than 0.1, 0.01 or 0.001% of the time. 99.9% is equivalent to 43.9 min downtime per month. 99.99% is equivalent to 4.4 min downtime per month. 99.999% is equivalent to 0.44 min downtime per month. Unplanned downtime can occur due to power outages, software and hardware errors, configuration and human errors. Planned downtime can occur when the operator of the mobile network is upgrading or maintaining the radio or core network systems.

4) Data volume: maximum size of a standard message between end points in the distribution network, **including** overhead for addressing, time stamps, authentication and authorisation, encryption, et al.

3.4 ICT Requirements for Energy Storage Systems

Energy storage systems such as high-performance batteries are vital to ensure that the frequency levels can be instantly corrected in future energy grids relying on 100% renewable energy sources. IEEE Standard 2030.2-2015 - IEEE Guide for the Interoperability of Energy Storage Systems Integrated with the Electric Power Infrastructure defines the requirements for such systems [1].

Power electronics such as inverters, or bidirectional power converters, interface a DC system to the AC grid. Depending on the application, a majority of the data for an ESS can be provided by the power inverter. The inverters also present a control interface for active and reactive power control, which is a critical component to ESS integration with the energy management of the DSO and TSO.

The following table provides examples of the data characteristics used for fast-acting and slow-acting classifications of storage technologies. Fast-acting technologies can be thought of as technologies that can provide fast changes to the electrical power system due to changes in state of the storage facilities. Examples of fast-acting technologies include battery, supercapacitors, flywheel, and SMES. Examples of slow-acting technologies include pumped hydro, underground compressed air, and thermal. The speed of operation for the slow-acting storage technologies is not quite as critical for the general functionality of the storage technology. [1]

Data Use Category	Monitoring	Fast Control	Slow Control	Protection
Distance	**kms**	**kms**	**kms**	**Kms**
Information transfer time	Between 3ms and 10ms	Between 3ms and 10ms	Between 3ms and 10ms	Between 3ms and 10ms
Data occurrence interval	Seconds	Minutes to hours	Minutes to hours	Minutes to hours
Priority	Low	High	High	High

Latency	High (≥160 ms)	Low (< 16 ms)	High (≥160 ms)	Low-Low (<3 ms)
Information reliability	Low (limited impact)	Medium (serious impact)	Medium (serious impact)	Medium (serious impact) to high (severe or catastrophic impact)
Data volume	Kilobytes	Bytes	Bytes	Bytes
Security	Medium (serious impact)	Medium (serious impact)	Medium (serious impact)	Medium (serious impact) to high (severe or catastrophic impact)

The three data use categories shown in this example are **monitoring, control, and protection**. Each of these categories has its own overall characteristics that are important in determining the correct entries for the rest of the table.

Monitoring is typically done with an update rate in the seconds. Only in special cases would a faster update rate be needed. Monitoring information has a history of not always being available due to the remote locations of monitoring devices. This has led to communication problems and delays in replacing failed sensors. However, the confidentiality of the data is important for monitoring ESSs because this data can be operational and competitive.

Control typically needs to be done quickly and with high reliability. For slow-acting ESS technologies, control that reacts in seconds is typically good enough. For fast-acting ESS technologies, faster controls may be needed for some applications, in the order of tens of milliseconds. The actions resulting from control data (or lack of appropriate control data) can have serious impacts depending on the actual application and implementation of the ESSs.

The results of a control signal not communicating properly in a timely manner can have a serious impact and cause equipment damage and power system problems.

Protection always needs to be communicated as close to instantaneously with as close to 100% reliability and availability as possible. This is due to the large amount of electrical energy available from the ESSs and EPS that can have a large effect on the EPS and associated equipment. Damage to equipment, loss of portions of the EPS, and the potential for personnel injury or death can result from the protection system mis-operating by not communicating protection data in a timely and accurate way.

Based on these data use categories, the classification/value range for each of the data characteristics can be determined.

4. Open Issues and Items for Future Research

The key performance indicators for the ICT networks need further research and validation. These values, listed in chapter 3.3 above, need closer analysis in simulations, and field trials during the execution of the relevant work packages in this project. These will be duly discussed in deliverable D2.5.

5. Conclusion

This document describes the relationship between the power network architectures being considered by the project for the frequency control scenarios of RESERVE and the ICT architectures and capabilities needed to implement them. The scope of this deliverable is limited to a selection of only five relevant scenarios for frequency control, which will also be evaluated in simulations or field trials in this project.

From a power network architecture perspective, it was observed that the main differences between Sf_A and Sf_B are in terms of system generation, inertia, dynamics, and control time window. In addition, very fast and reliable communication is more critical in Sf_B than in Sf_A.

It was also found that there was little difference in the control architecture between Sf_A and Sf_B. In frequency control, the decisions and control algorithms will be taken by the local DER controllers, even if the frequency measurements are sent to the central frequency data managers for monitoring purposes.

While it was found that only kilobytes of data would be transferred from measuring units, the sheer number of end-points (hundreds, up to thousands) would be a major cause for consideration of ICT communication architecture and requirements.

Security concerns centred around authentication and authorisation especially given the impact that would happen if there were malicious modification of the measurement data and commands sent to end-point controllers.

For all scenarios, the ICT communications architecture was considered with a focus placed on the use of 5G wireless communications capabilities where it was appropriate. Future ICT solutions offer great opportunities for instant corrective actions for monitoring and control and the deeper impact of these solutions for frequency stability will be explored in version 2 of this deliverable, ie Deliverable 2.5 due in project month 36.

6. References

Deliverable D1.1 [RESERVE]

Deliverable D1.2 [RESERVE]

Deliverable D1.3 [RESERVE]

1. IEEE Standard 2030.2 – 2015, IEEE Guide for the Interoperability of Energy Storage Systems Integrated with the Electric Power Infrastructure Standard IEEE Std 2030.2™-2015 Available online: https://standards.ieee.org/findstds/standard/2030.2-2015.html
2. European Network of Transmission System Operators for Electricity (ENSOE), Network Code Development, Available online: https://www.entsoe.eu/major-projects/network-code-development/updates-milestones/Pages/default.aspx
3. ESB Networks, Distribution Code, Version: 5.0, April 2016. Available online: https://www.esbnetworks.ie/docs/default-source/publications/distribution-code-v5-0.pdf?sfvrsn=6
4. EirGrid, Grid Code, Version 6.0, 22nd July 2015. Available online: http://www.eirgridgroup.com/site-files/library/EirGrid/GridCodeVersion6.pdf
5. Commission Regulation (EU) establishing a guideline on electricity transmission system operation, draft 2016. Available online: https://ec.europa.eu/energy/sites/ener/files/documents/SystemOperationGuideline%20final%28provisional%2904052016.pdf
6. IEC 61850, an overview, Available online: https://en.wikipedia.org/wiki/IEC_61850
7. IEC 61850-7-420:2009 Communication networks and systems for power utility automation - Part 7-420: Basic communication structure - Distributed energy resources logical nodes

7. List of Abbreviations

AGC	Automatic Generation Control
B2B	Business to Business
CEP	Complex Event Processing
CPMS	Charge Point Management System
Δf	Amount of change of frequency
DER	Distributed Energy Resources
DMS	Distribution Management System (DSO domain)
DSO	Distribution System Operator
EAC	Exploitation Activities Coordinator
EMS	Energy Management System (TSO domain)
ESS	Energy Storage Systems
ESCO	Energy Service Companies
ESO	European Standardisation Organisations
ETSI	European Telecommunications Standards Institute
FDM	Frequency Data Manager
HV	High Voltage
ICT	Information and Communication Technology
IEC	International Electro-technical Commission
IoT	Internet of Things
KPI	Key Performance Indicator
LV	Low Voltage
M2M	Machine to Machine
MG	Microgrid
MGCC	Microgrid Control Centre
MPLS	Multiprotocol Label Switching
MV	Medium Voltage
OPGW	Optical Ground Wire
O&M	Operations and maintenance
PCC	Point of Common Coupling
PPP	Public Private Partnership
PV	Photovoltaic (power generation unit)
S3C	Service Capacity; Capability; Connectivity
SCADA	Supervisory Control and Data Acquisition
SDN	Software-defined Networking
SDOs	Standards Development Organisations
SG-CG	Smart Grid Coordination Group
SME	Small & Medium Enterprise
SS	Secondary Substation
S.SAU	Secondary Substation Automation Unit
TSO	Transmission and System Operator
VOI	Virtual Output Impedance
VPN	Virtual Private Network
VPP	Virtual Power Plant
WP	Work Package