RESERVE

D3.1 v1.0

Power Electronics Stability Criteria for AC Three Phase Systems

The research leading to these results has received funding from the European Union's Horizon 2020 Research and Innovation Programme, under Grant Agreement no 727481.

Project Name	RESERVE
Contractual Delivery Date:	30.09.2017
Actual Delivery Date:	30.09.2017
Contributors:	Sriram Karthik Gurumurthy (RWTH), Conor Murphy (UCD), Hugo Gill (UCD), Andrew Keane (UCD), Sean Walsh (ESB)
Workpackage:	WP-3 Voltage Control
Security:	PU
Nature:	R
Version:	1.0
Total number of pages:	41

Abstract

This deliverable provides an overview of voltage stability and voltage management concepts for futuristic distribution networks, based on inverters up to 100% RES. A twofold solution, one focussing on dynamic stability and the other on optimal power flow for active management of voltage is proposed. Such a network faces a threat to its stability based on the highly dynamic loads and the threat of oscillations and other actions between the rectifiers and inverters. In relation to the stability threat, the generalized Nyquist criterion, an extension of the Middlebrook criterion, is adopted to determine levels of stability in the dynamic system. Initial implications for network code definitions and ancillary services are reported. Validation of this new approach will be undertaken in the next deliverable.

Additionally, such a network faces the challenge of determining the optimal set point for optimal power flow. In relation to this challenge, this deliverable presents an overview of voltage management concepts, and then proposes an active voltage management for distribution networks with high penetration of RES. Validation of this new approach will be undertaken in the coming months and reported in future deliverables.

Keyword list

Voltage control, stability, generalised nyquist criterion, middlebrook stability theory, active voltage management, optimal power flow

Executive Summary

The work package 3 is investigating new approaches for dynamic voltage stability monitoring and active voltage management in distribution grids with its prime focus on developing futuristic research concepts. The motivation of addressing such advanced approaches comes from the increase of power electronic interfaced renewables in distribution grids. The solutions addressed will be decentralised and will be equipped with state of the art ancillary services and ICT which will be validated by field trials and simulations by the end of the project. Another important goal of this WP is to identify the drawbacks of current network codes pertaining to the operation of a distribution grid with 100% RES and then suggest modifications for current network codes and when required introduce new codes which will allow upto 100% RES. Research on sustainability issues and market introduction scenarios are also undertaken in this WP.

This deliverable addresses the dynamic voltage stability of three phase grid connected inverters as a first of system level **Dynamic Voltage Stability Monitoring** (SV_A) which the WP envisions. Stability methods for DC systems based on **Middlebrook theory** are reviewed and modifications in modelling of AC systems allow the implementation of the Generalised Nyquist Criterion which is a relaxed version of the Middlebrook criterion. Future deliverables will show results on effectiveness and validity of this technique.

To monitor voltages in steady state condition while optimising the network performance in terms of minimising power losses and network unbalance, an **Active Voltage Management** (SV_B) approach is proposed in this deliverable. A review of the state of the art is presented and contrasted with the proposed active voltage management approach. Furthermore, the 3-OPF tool which will be used in the future to perform the approach is explained. Future deliverables will show results on effectiveness and validity of this technique.

Implications of new techniques on working power networks are explained along with networks codes and ancillary service implications. Furthermore, implications for ICT based on initial requirements for each scenario are also documented. This deliverable also dealt with documenting sustainability implication of the new techniques.

Authors

Partner	Name	e-mail
RWTH		
	Sriram Karthik Gurumurthy	sriram.karthik.gurumurthy@rwth-aachen.de
UCD		
	Conor Murphy	cmurphy5@ucd.ie
	Hugo Gill	hugo.gil@ucd.ie
	Andrew Keane	andrew.keane@ucd.ie
ESB		
	Sean Walsh	sean.walsh@esb.ie

Table of Contents

Executive Summary 2

1. Introduction. 6

1.1 Scope of the deliverable 6
1.2 Description of voltage control scenarios 6
1.2.1 Use case: SV_A - Dynamic Voltage Stability Monitoring 6
1.2.2 Use case: SV_B - Active Voltage Management 6
1.3 Differences between scenarios SV_A and SV_B 7
1.3.1 SV_A: Dynamic voltage stability monitoring 7
1.3.2 SV_B: Active voltage management 7
1.4 How to read this document 8

2. Preparing the foundations of new approaches to voltage stability on distribution systems 9

2.1 Background 9
2.1.1 Description of classical distribution network 9
2.1.2 Description of futuristic distribution network 9
2.1.3 Challenges of futuristic distribution networks 10
2.1.3.1 The threat to stability posed by highly dynamic loads 10
2.1.3.2 The threat of oscillations and other interactions between the inverter and the rectifier 10
2.2 Review of stability criteria for DC systems 11
2.2.1 Methods for single converter 11
2.2.2 Methods for multi-parallel converter 13
2.3 Extension of stability criteria for three phase AC systems 13
2.3.1 Challenges 13
2.3.2 Framework of rotating coordinates 13
2.3.3 Review of stability criteria for three phase AC systems 15
2.3.3.1 Methods for single converter system 15
2.3.3.2 Methods for multi-parallel converters 15
2.4 Summary and future work 16

3. Preparing the foundations of new approaches to voltage management on distribution systems 17

3.1 Background 17
3.1.1 Voltage Constraints 18
3.1.2 Thermal Constraints 19
3.2 Active Voltage Management - Concepts and Applications of RES technology on Distribution Systems 19
3.2.1 State of the art 19
3.2.1.1 Centralised solutions 20
3.2.1.2 Decentralised solutions 20
3.2.1.3 Bottom up demand modelling 21
3.2.2 Summary 22
3.2.3 Conclusion 23
3.3 Active Voltage Management with dynamic management of inverter based RES–Proposed Technique for Sv_B 23
3.3.1 3-OPF Modelling Tool 24
3.3.2 Volt-VAr Curves 25
3.3.3 Network Models 26
3.3.4 Conclusion 26
3.4 Conclusion 27

4. Implications of voltage scenarios SV_A and SV_B 28

4.1 Implications of new technique in the context of working distribution networks 28
4.1.1 New Grid codes are needed 28

4.1.2 New inverters are needed ... 28
4.1.3 New communications links are needed ... 29
4.1.4 New control functionality is needed ... 29
4.1.5 An example of commercialisation for a similar product ... 29
4.2 The implications of the new technique for ICT ... 29
4.3 The network codes and ancillary services implications ... 30
4.3.1 Status of network codes ... 30
4.3.2 Network codes and ancillary services implications of SV_A ... 31
4.3.3 Network codes and ancillary services implications of SV_B ... 31
4.4 The sustainability implications of the new technique ... 32
4.4.1 The role of prosumers ... 32
4.4.2 The emerging market for voltage stability and management services ... 32
4.4.3 The emerging market new generation of inverters ... 32
4.5 Summary ... 32

5. Conclusion ... 33

5.1 Future work ... 33

6. References ... 34

7. List of Abbreviations ... 38

8. List of Figures ... 40

Annex ... 41

1. Introduction.

1.1 Scope of the deliverable

The deliverable D3.1 *Power Electronics Stability Criteria for AC Three Phase Systems* marks the first technical documentation of WP3 of the RESERVE project. WP3 explores new concepts and theories surrounding steady state voltage regulation and dynamic voltage stability for distribution energy networks with 100% RES penetration. This deliverable summarises the activities of Task 3.1 within the wider context of WP3.

1.2 Description of voltage control scenarios

1.2.1 Use case: SV_A - Dynamic Voltage Stability Monitoring

The Dynamic Voltage Stability Monitoring (DVSM) is a decentralised approach for monitoring transient voltage stability in LV distribution grids. The secondary substation automation unit (SSAU) hosts the voltage stability algorithm as a software component, and this program behaves as a coordinator gathering the information from the inverters to compute stability margins and send back control commands back to the inverters. The SSAU performs the evaluation of stability margins once an hour for each inverter.

The approach in SV_A is based on the Middlebrook theory where the stability can be determined using the inverter output impedance and the grid impedance as input. For the measurement of the impedances, a wide-band system identification (WSI) tool is present in the inverter. The WSI tool injects a pseudo-random binary sequence (PRBS) signal into the controller in the inverters controller and processes the incoming voltage and current measurements to determine the impedance. Consider an inverter A, and an inverter B which neighbours inverter A. The SSAU sends an initiation signal to the inverter A to use its WSI tool to measure the grid impedance. An inverter cannot measure its own impedance. For this reason, the SSAU sends a command to inverter B to apply its WSI tool to inject a PRBS signal to measure the output impedance, the SSAU instructs inverter A to record current and voltage measurements. The WSI tool of inverter A can then compute the output impedance of inverter A.

The coefficients of the identified grid and output impedance are sent back to the SSAU. The SSAU performs stability analysis based on the Middlebrook theory, computes the stability margins and if required, sends back control commands to the virtual output impedance controller (VOI) of the inverter A. This process is repeated for Inverter B and furthermore for all other inverters present under the direct control of the SSAU.

1.2.2 Use case: SV_B - Active Voltage Management

The Active Voltage Management (AVM) technique reduces the voltage control problem to a local objective for each RES unit: to continuously target a single voltage value by maintaining a relationship between the reactive power provided and the voltage observed. This style of control is known as a volt-VAr curve. The target voltage is obtained using an AC optimal power flow (OPF) centralised approach that is capable of multi-period analysis. Any objective that can be formulated within the realm of AC OPF analysis can be investigated, producing an objective-governed volt-VAr curve.

These curves constrain the operation of the units based solely on their available reactive power capability and the present voltage measurement to fulfil the objective that realising the target voltage will bring about. In D3.2, a case study is presented showcasing the stages involved in an offline-modelling technique, to produce these volt-VAr curves.

The consequence of this is that in an online deployment setting, the voltage control problem is reduced to a linear relationship between the target voltage of the RES unit and the reactive power output of the unit. This provides the means to operate in a decentralised manner where the complexity of AC power flow solutions need not be calculated on a continuous basis.

Reducing the offline centralised analysis to an online and decentral deployment through the means of optimally chosen volt-VAr curves, gives a practical means to facilitate the objectives of the DSO. These objectives could, in future, be in response to market mechanisms, or simply regulate the network in the most efficient way possible. This capability is increasingly important

considering that future voltage management concepts should provide the means to making best use of the finite capacity of distribution networks.

1.3 Differences between scenarios SV_A and SV_B

The authors would like to make it clear to the reader about the difference between the work done on dynamic voltage stability monitoring SV_A (Chapter 2) and active voltage management SV_B (Chapter 3).

1.3.1 SV_A: Dynamic voltage stability monitoring

- Addresses dynamic voltage stability or transient voltage stability, where the time frame is of the order of milliseconds.
- Requires a WSI tool, VOI controller and communication ports in the inverter.
- Requires SSAU to have the system level voltage stability algorithm.
- The SSAU and the inverters communicate through mobile networks, such as LTE or 5G.
- Works on an hourly basis to monitor system level stability, when stability of the system is endangered, corrective actions are undertaken to ensure sufficient stability margins.
- No need to compute optimal power flow set-points, ie reference power values for the inverter.
- Does not manage voltage in steady state, ie in larger time frames.

1.3.2 SV_B: Active voltage management

- Addresses optimal power flow for a 100% RES network and manages voltage actively, and uses the service of household inverters. The time frame is of the order of minutes.
- Requires communication ports in the inverter.
- Requires the addition of the volt-VAr curve functionality in SSAU.
- The SSAU and the inverters communicate through mobile networks, such as LTE or 5G.
- Works every 5 minutes, with its objective to maintain voltage within stipulated limits as per grid codes by solving an optimisation problem to minimise objectives such as losses.
- Does not compute dynamic stability margins.
- Note that Sv_A and Sv_B can co-exist in future networks.
- Sv_B does not perform corrective action when stability margins are low.

Furthermore, the work done on dynamic voltage stability monitoring and active voltage management **do not interfere or affect** the performance of one another. Thus, a twofold approach is formulated where the former focuses on a small time frame dynamic scenario (SV_A) and the latter addresses the larger time frame steady state scenario (SV_B).

1.4 How to read this document

Scenarios pertaining to WP3 namely SV_A and SV_B are explained in D1.2 *Requirements placed on energy systems on transition to 100% RES*. The requirements on communication for both the scenarios can be found in D1.3. It is recommended to the reader to peruse through the voltage scenarios in these documents.

Figure 1 shows the placement of this deliverable (**D3.1**) in the wider context of **WP3** as well as interlinked work packages of the RESERVE project:

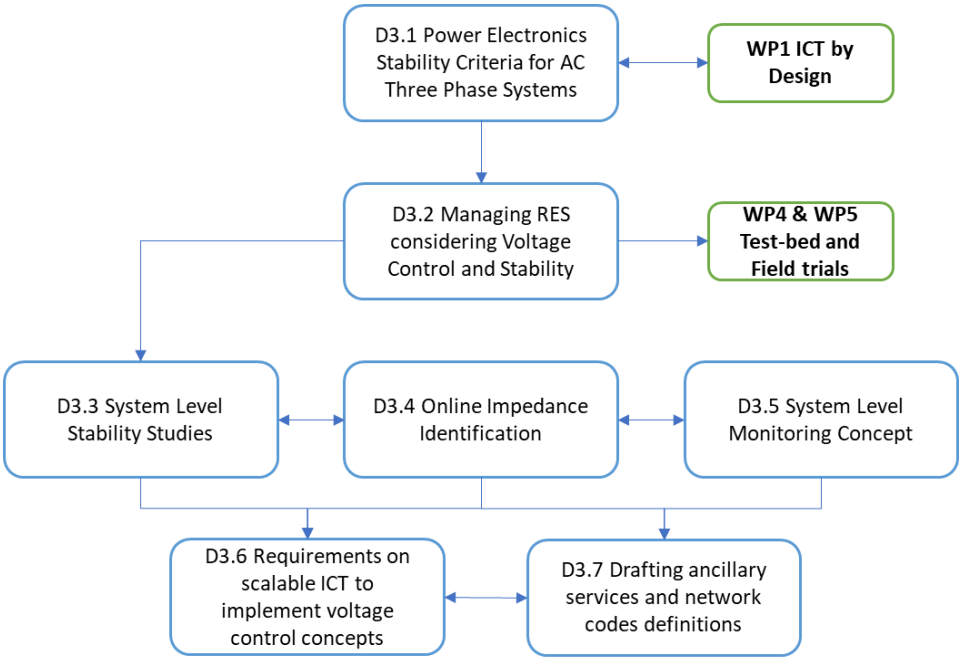

Figure 1 Relations between Deliverables in WP3 and other work packages

2. Preparing the foundations of new approaches to voltage stability on distribution systems

2.1 Background

The aim of this chapter is to study the existing stability methods for DC systems based on 'Middlebrook criterion' [1]. Challenges of applying this method to AC systems are studied and a suitable stability theory for AC systems is addressed. Validations of the proposed mathematical framework is carried out through simulations.

2.1.1 Description of classical distribution network

The classical low voltage (LV) distribution grid consists of a Secondary Substation Automation Unit (SSAU) from which radial feeders are available. The loads consisting of small industries and households are connected to these radial feeders as depicted in Figure 2. Typically, due to lack of dynamic voltage control concepts in the loads, the loads can be represented as fixed impedances. The nodes at which the local loads are connected to the radial LV feeder is denoted as the point of common coupling (PCC) local to the load. The impedance present in the feeder between two local PCCs is also depicted in the figure as Z_{c1}, Z_{c2} etc. The impedance of the feeder is due to the resistance of the cables and the inductance of the cable. In this simple structure, power flow is always unidirectional where power flows from the SSAU to the loads through the radial LV feeder. There is no real power injection from the load side into the LV feeder through the local PCC in the classical picture.

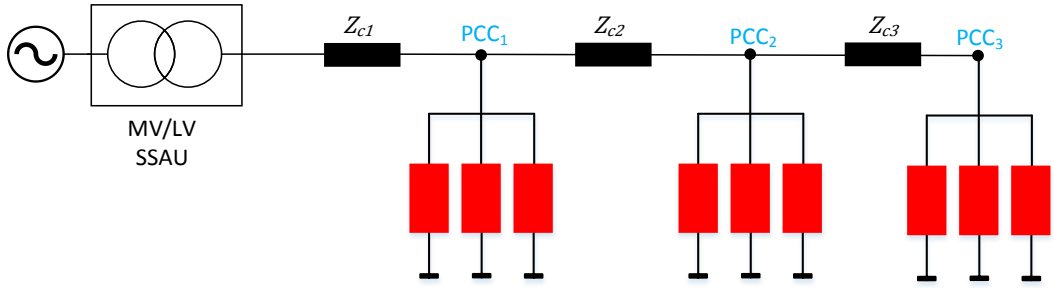

Figure 2 Classical power system structure

The present scenario is driven more dynamically with the advent of power electronics and with the improvement in renewable energy technology such as PV and Wind. The influence of renewables has created a distributed paradigm in the nature of power generation and the pre-existing hierarchy of power flow from high voltage AC grids to medium voltage AC grids and then to low voltage AC distribution grids is altered. Real power generation and injection from households into LVAC grids also exists. Power electronic converter topologies dedicated to convert DC to AC are used to interface the PV panels with the LV feeder as shown in Figure 3 [2], [3]. The inverters are typically controlled to track and operate around the maximum power point (MPP) [4]. The inverter feeds a part of the power generated from RES locally and the rest is injected into the grid [5]. Furthermore, the inverter behaves as a constant power source (CPS) from the grids perspective.

2.1.2 Description of futuristic distribution network

Considering the structure of an LV grid for the future, the situation is portrayed towards a 100% RES scenario. Every household has its own RES and a grid connected inverter. With the development of LED based illumination technology, the lighting loads would be DC based. Similarly, household loads which involve electric motors are moving towards brushless technology. Brushless DC motors and permanent magnet synchronous motors are of prime focus for the future and these motor technologies require a DC bus connection. A feedback controlled inverter is integrated with the motor within a single enclosure and this concept is known as integrated motor drive (IMD) technology [6]. Furthermore, the increased popularity of electric vehicles and its corresponding DC technology for battery charging systems would increase the concentration of DC loads in the grid. Rectifiers which convert AC to DC are used to interface the LVAC feeder with the above-mentioned examples of futuristic DC loads. The DC loads are represented with blue in Figure 4. The futuristic scenario will mostly likely have DC loads, however to respect the existing debate, few AC loads in red are also depicted. The new buildings

to be built in the future would be built as DC homes. However, in existing buildings, it will be advantageous when appliances are slowly replaced to DC instead of converting the entire residential network to DC in a single step. Hence, the case of hybrid AC/DC homes are considered without loss of generality [7], [8].

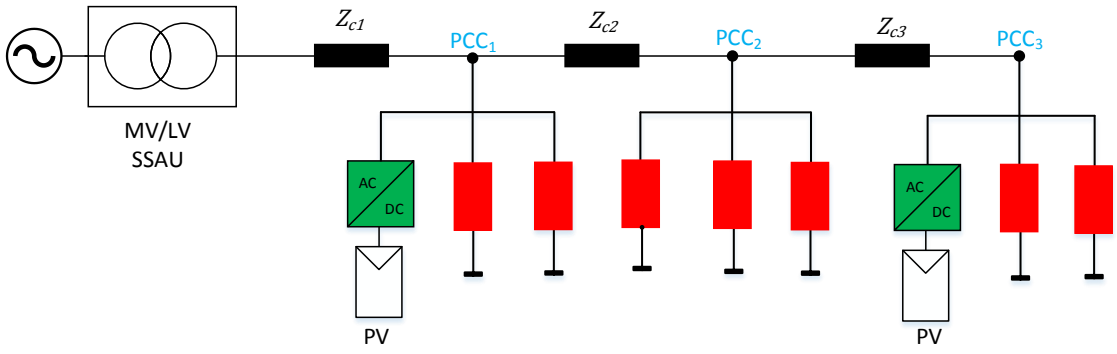

Figure 3 Modern scenario with PV penetration

2.1.3 Challenges of futuristic distribution networks

2.1.3.1 The threat to stability posed by highly dynamic loads

To feed power into DC loads in a controlled manner, the rectifiers will have their own independent voltage control algorithm. These rectifiers are referred to as feedback controlled rectifiers or active rectifiers. From the grids perspective, active rectifiers behave as a constant power load (CPL). The net impact caused by such non-linear source (CPS) and load (CPL) is the negative resistance behaviour which is destabilising in nature. The negative resistance behaviour attributed to that of CPL can be explained as follows: When the voltage at the local PCC increases, the current drawn by the CPL decreases and vice versa thereby attributing to a negative resistance behaviour[9]–[11]. This poses a major challenge to the grid in terms of stability [12]–[14]. Without an adequately fast and robust control system, the grid voltage and current can become uncontrollable and unstable [15]. Numerous studies have been performed to understand the destabilising nature of CPL and what impact the control bandwidth of CPL has on the rest of the system.

2.1.3.2 The threat of oscillations and other interactions between the inverter and the rectifier

Another challenge with inverters and feedback controlled rectifiers tied to a local PCC is that the output impedance of the inverter and the input impedance of the active rectifier as seen from the local PCC can possibly overlap in certain frequency ranges. This can cause dynamic interactions such as oscillations in the current and voltage waveform when a sudden step change in power flow happens. Scenario SV_A aims to address a system level stability theory for the monitoring of stability margins along with an appropriate virtual output impedance (VOI) based control structure to stabilise the grid.

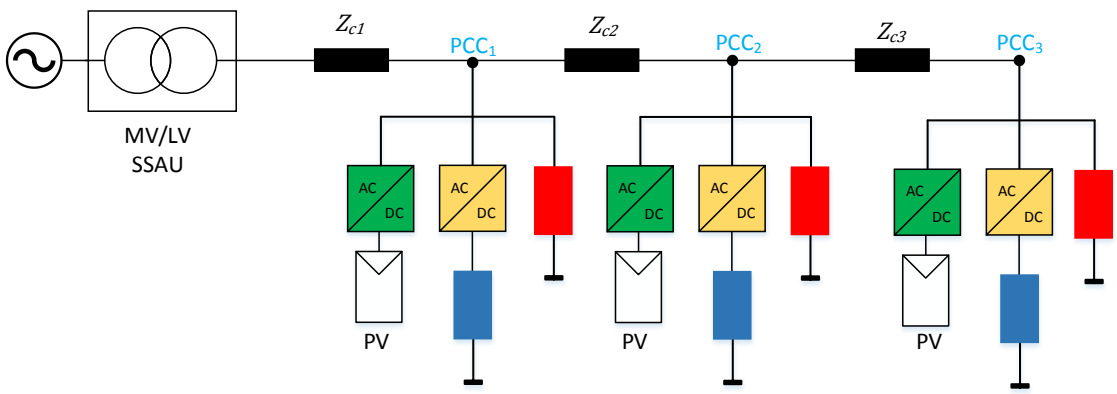

Figure 4 Futuristic power system structure

2.2 Review of stability criteria for DC systems

2.2.1 Methods for single converter

The stability analysis of two back to back connected feedback controlled converters is of prime focus. Originally, the stability theory developed by Middlebrook addresses the stability condition for the input filter design of the converter [1]. On a general note, the Middlebrook criterion studies the stability condition of two interconnected subsystems with respect to the point of coupling of the two subsystems. From the point of common coupling, the source subsystem which feeds in power is perceived as an equivalent output impedance and the load side subsystem as an equivalent input impedance. The Middlebrook criterion states that a system is said to be stable if the ratio of the magnitude of source side impedance ($|Z_s|$) to the load side impedance ($|Z_l|$) is much less than 1 for all frequencies as shown in equation (2.1), where ω refers to the angular frequency variable.

$$\left|\frac{Z_s(j\omega)}{Z_l(j\omega)}\right| << 1 \tag{2.1}$$

The ratio between $|\boldsymbol{Z_s}|$ to $|\boldsymbol{Z_l}|$ would be referred to as the Minor Loop Gain (MLG) [16]. This condition is more than sufficient for stability as it leads to artificial conservative design of converters by over emphasizing the limits of stability, since a system violating the above condition can still be stable. The Middlebrook criterion is only a sufficient condition but not a necessary condition for stability. The criterion only deals with magnitude of the impedance but not the phase [16]. Figure 5 shows the equivalent impedance model of source-load subsystem.

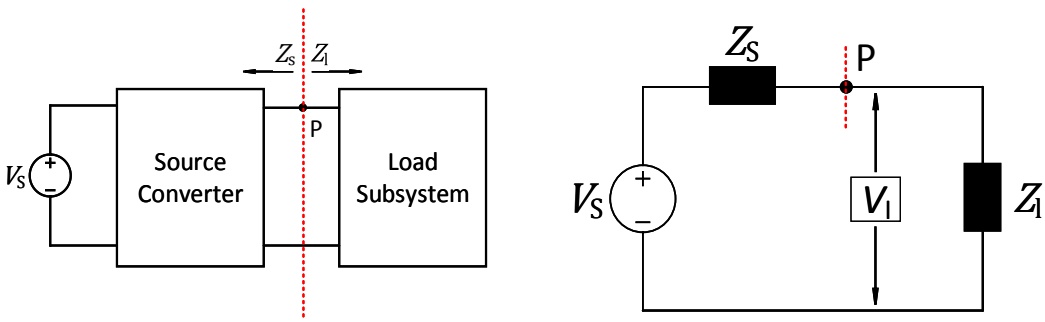

a) Source-load system

b) Equivalent impedances

Figure 5 Equivalent impedance model

An extension of the Middlebrook criterion would be the Gain Margin Phase Margin (GMPM) criterion [17]. Here the minimum required gain and phase margins are specified and a so called forbidden region is formulated where the polar plot of MLG cannot exist. This approach is more design oriented where the filter design needs to satisfy certain gain and phase margin requirements [16]. The magnitude of MLG can be higher than 1 unlike the Middlebrook case. Hence it can be perceived that the conservative property is relaxed to a certain extent. Further extensions for handling systems with multiple loads are given by the Energy Source Analysis Consortium (ESAC) criterion [16], [18]. The minimum required phase and gain margins should be specified. The specified gain and phase margin information is used to construct a volume in 3-D admittance space made with the coordinates magnitude, phase and frequency where the MLG curve must not enter or intersect. This criterion is computationally intensive since it involves a 3-D analysis [16].

A more relaxed and generalised version of the Middlebrook criterion is based upon Nyquist stability theorem. The Nyquist stability criterion is a method of interpreting the closed loop stability of a system based on the open loop stability through the characteristic loci of the Nyquist plot. System stability can be determined in a comprehensive manner using the Nyquist stability theorem. In literature, the Middlebrook criterion terminology usually refers to the conservative formulation where $|\boldsymbol{Z_s}|/|\boldsymbol{Z_l}|$ is required to be evaluated. However, in certain literatures, the

Middlebrook criterion terminology would refer to the application of Nyquist stability criterion. In this report, the two criterions are clearly differentiated from one another. The frequency domain interpretation of the major stability criterions is shown in Figure 6.

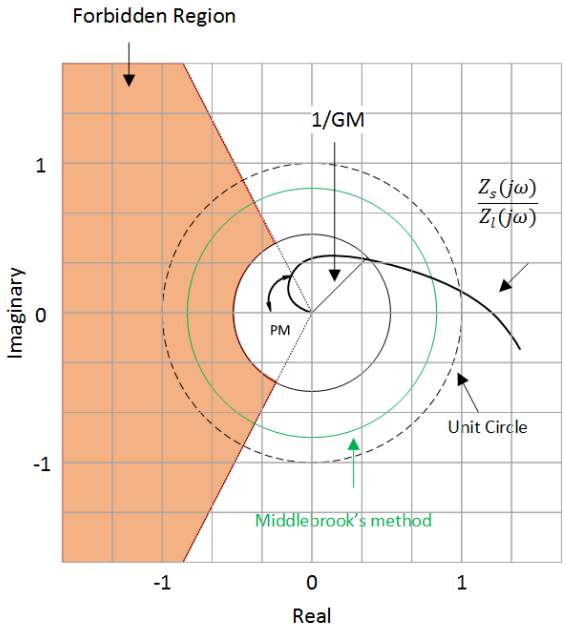

Figure 6 Stability criterion for DC systems [16], [19]

The Nyquist stability criterion for DC systems is elucidated based on Figure 5. The input side voltage source is denoted by V_s and voltage at the output terminal of the converter is denoted as V_l. The point of connection with the grid is denoted by *P*. With respect to point *P*, the source side converter can be equivalently modelled as an output impedance Z_s and the grid impedance can be modelled as an equivalent input impedance Z_l. The voltage V_l is expressed in terms of the source voltage V_s in equation (2.2). A general assumption is that the source voltage V_s is a stable source, then the stability of the load voltage V_l is purely dependent on the denominator term of equation (2.2) which contains the ratio of source and load impedances.

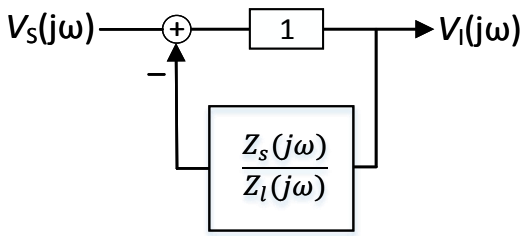

Figure 7 Closed loop control system formed by source-load impedances

$$V_l(j\omega) = \frac{V_s(j\omega)}{Z_s(j\omega) + Z_l(j\omega)} Z_l(j\omega) = \frac{V_s(j\omega)}{1 + \frac{Z_s(j\omega)}{Z_l(j\omega)}} \tag{2.2}$$

In linear control theory, stability of a closed loop system is adjudged by considering the poles or roots of the denominator term of the closed loop transfer function. In the investigated scenario of this deliverable, the closed loop transfer function is ratio of output quantity and input quantity, that is $V_l(j\omega)/V_s(j\omega)$. The closed loop system representation in Figure 7 is equivalent to the description in Equation (2.2). For a closed loop system to be stable the denominator polynomial must strictly have all its poles in the negative axis. The straightforward problem is that, as the order of the denominator polynomial increases, the computational complexity is high. Furthermore, there is no information obtained pertaining to stability margins. Stability margins consists of two components: Gain Margin (GM) and Phase Margin (PM). The stability margins specify how stable

the system is, the lower the margins, the closer the system is to instability. The Nyquist method is not only used to determine closed loop stability but also determines the margins of the system. The Nyquist plot is obtained by tracing the path taken by the open loop transfer function in the complex plane by varying the frequency from negative infinity to positive infinity. The number of anticlockwise encirclements around the critical point (*-1+j0*) in the complex plane made by the Nyquist plot of the MLG or the open loop transfer function is denoted as $\boldsymbol{N}$. Let the number of unstable poles of the MLG be $\boldsymbol{P}$, which is the number of poles of MLG on the right half plane (RHP). The Nyquist stability theory states that the number of anticlockwise encirclements around the critical point (*-1+j0*) $\boldsymbol{N}$ must equal the number of right half plane (RHP) poles $\boldsymbol{P}$ of the MLG for the system to be stable. An alternate way of specifying the theorem is that the number of closed loop unstable poles of the system $\boldsymbol{Z}$ equals $\boldsymbol{P} - \boldsymbol{N}$, as shown in equation (2.3) and the closed loop system is stable if and only if $\boldsymbol{Z} = \boldsymbol{0}$ or $\boldsymbol{P} = \boldsymbol{N}$ (note that $\boldsymbol{Z}$ is an integer greater than or equal to zero).

$$\boldsymbol{Z} = \boldsymbol{P} - \boldsymbol{N} \tag{2.3}$$

2.2.2 Methods for multi-parallel converter

DC systems involving multiple sources and loads are addressed through the passivity theory. Passivity based stability Criterion (PBSC) for DC systems was proposed and applied in [16], [20]. Consider *n* source side converters (LRC) and *m* load converters (POL) connected to a DC grid as shown in Figure 8a. The closed output and input impedances of the LRCs and POLs respectively are computed. One can observe that all the impedances share common terminals (the grid), hence a 1-port representation is derived by taking the parallel combination of all the impedances as shown in Figure 8b. The above system is passive and hence stable only if all poles of Z_{bus} lie on the left half plane (LHP). Nyquist stability criterion can be applied to Z_{bus} to attain a sufficiency condition for system stability.

a) Multi-parallel source-load system **b) Equivalent grid impedance model**

Figure 8 PBSC stability analysis [16]

2.3 Extension of stability criteria for three phase AC systems

2.3.1 Challenges

Three phase AC quantities can be thought of as a single vector which rotates in space with one fixed end at the origin (also known as phasor). In the non-rotating or stationary frame of reference, the steady state DC operating point is undefined due to the sinusoidal nature of the quantities. For the application of Middlebrook stability criterion, the alternating quantities of the three-phase grid tied inverter system needs to be transformed into an equivalent DC system. This is achieved by choosing a rotating frame of reference which rotates synchronously with the system. By applying the transformation from stationary to rotating coordinates, a three phase AC system transforms into two coupled DC systems which could be analysed through methods which were once defined for DC systems like the Middlebrook Criterion.

2.3.2 Framework of rotating coordinates

In this section, the fundamentals of coordinate transformation from stationary to synchronous reference frame and vice versa is briefed. A three phase AC system is represented through the

stationary set of coordinates A, B and C axies which are 120 degrees spatially apart from each other. Consider a three-phase balanced voltage signal (V_a, V_b and V_c) which are initially aligned with their respective axies. The vector addition of the three voltages V_a, V_b and V_c results in a net resultant voltage signal V_s, which also rotates at the same frequency as V_a, V_b and V_c. Now with two stationary coordinates (α and β), it is possible to represent the resultant V_s without loss of generality. The vector V_s can be resolved into two components V_α and V_β. This transformation which enables the change from three stationary coordinates to two stationary coordinates is known as the Clarke transformation. The system is still variable in time as the components V_α and V_β are sinusoidal in nature and orthogonal to one another.

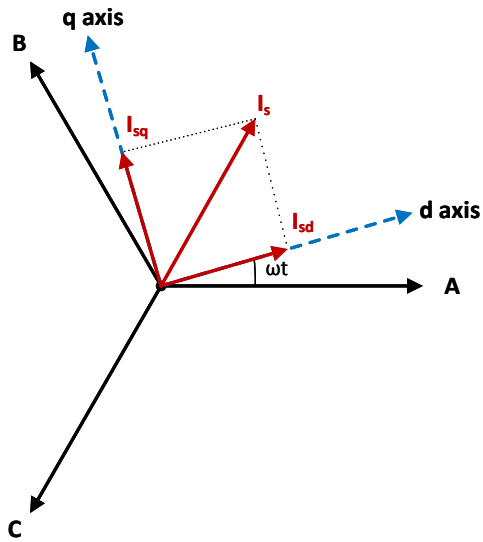

Figure 9 Representation of *dq* coordinate system

By choosing a 2-axis coordinate system which rotates synchronously with the grid frequency, the transformed components obtained would be DC in nature due to lack of relative motion between the rotating vector V_s and rotating coordinate system. This rotating frame of reference is known as synchronous reference frame (SRF) which consists of a direct axis (*d*) and quadratic axis (*q*) perpendicular to each other. The initial alignment choice of the d-axis can be arbitrary, however in this deliverable and the following deliverables, the *d*-axis is chosen to be aligned with the A axis at time $t=0$. The overall transformation from the stationary *abc* reference frame to the rotating *dq* reference frame is called as the Park Transformation. The Park transformation is defined in equation (2.4), where the transformation matrix T_{dq} is given in equation (2.5).

$$\begin{bmatrix} V_d \\ V_q \end{bmatrix} = T_{dq} \begin{bmatrix} V_a \\ V_b \\ V_c \end{bmatrix} \tag{2.4}$$

$$T_{dq} = \frac{2}{3} \begin{bmatrix} \cos\theta & \cos\left(\theta - \frac{2\pi}{3}\right) & \cos\left(\theta + \frac{2\pi}{3}\right) \\ \sin\theta & \sin\left(\theta - \frac{2\pi}{3}\right) & \sin\left(\theta + \frac{2\pi}{3}\right) \end{bmatrix} \tag{2.5}$$

Similarly, an inverse transformation from *dq* frame to *abc* frame is also possible. Notice that the Park transformation requires the information of angle $\theta=\omega t$. The information of the angle is determined by the phase locked loop (PLL). The PLL is also a closed loop control system which introduces certain dynamics to the system. The PLL basically modifies the impedance of the source converter (in this scenario, the inverter) in a certain way [12]. However, in this deliverable, the dynamics introduced by PLL are neglected in the mathematical modelling. The dynamics of PLL will be considered from deliverable D3.2 onwards. The factor 2/3 in the above transformation is used for making the transformation amplitude invariant, where amplitudes are conserved while changing from *abc* to *αβ*. The power in *dq* frame is computed through equation (2.6).

$$P = \frac{3}{2}\left(v_d i_d + v_q i_q\right) \tag{2.6}$$

The power invariant transformation uses a factor of $\sqrt{2/3}$ instead of 2/ 3 in equation (2.5) where power is conserved. The amplitude invariant form is adopted in this document. The type of transformation chosen is purely a choice and there are no specific advantages for any given transformations. An example of transformation from *abc* to αβ frame and furthermore to *dq* frame of reference is provided in Figure 14.

2.3.3 Review of stability criteria for three phase AC systems

2.3.3.1 Methods for single converter system

The impedance based methods cannot be directly applied to AC systems for the simple reason that there are no equilibrium points. In AC systems, either the source could be the load or vice versa and hence leading to completely faulty conclusions regarding system stability. Furthermore, an inverter can be modelled either as a voltage source system with series impedance or as a current source system with shunt impedance. It was shown that the grid tied inverter system operates more stably when the inverter output impedance is high [21]. Influencing factors or dependencies for system stability can be elaborated as follows: System stability for a given grid impedance is dependent on inverter impedance; inverter impedance is dependent on the output filter structure and its damping properties and the controller gains.

$$[\boldsymbol{I} + \boldsymbol{L}]^{-1} = \boldsymbol{0} \tag{2.7}$$

By using the *dq* coordinate system, the inverter is modelled as a multiple-input multiple-output (MIMO) system (with 2 inputs and 2 outputs). Equivalent form of the Nyquist criterion from the literature suitable for multivariable systems is the Generalised Nyquist criterion (GNC) originally developed by [22], [23]. This criterion is applied to grid connected converters in [12], [19], [21]. Let the MLG of the system be denoted by $\boldsymbol{L}$, which contains the impedance information. Technically, the closed loop analysis is performed by plotting the Nyquist plot of equation (2.7) and observing encirclements around the origin. However, this computation is highly complex and intensive [24]. Hence, the Nyquist plot is formulated by plotting the characteristic loci of the eigen value of $\boldsymbol{L}$, as the frequency is varied [24], [25]. In our case, two eigen values (λ_1 and λ_2) are encountered since it is a 2×2 system and therefore 2 characteristic loci are plotted. The number of anti-clockwise encirclements is monitored for both the characteristic loci: let them be $\boldsymbol{N_1}$ and $\boldsymbol{N_2}$ respectively. Like the Nyquist stability criterion used for DC systems, the GNC can be defined as follows.

$$\boldsymbol{Z} = \boldsymbol{P} - (\boldsymbol{N_1} + \boldsymbol{N_2}) \tag{2.8}$$

The system is said to be stable if and only if $\boldsymbol{Z}=0$. A variant of the GNC is the inverse GNC (GINC), where the RHP zeros are considered instead of RHP poles. The criterions are equivalent. Methods based on applying GNC once at the PCC are suitable for the simple case of a grid connected converter. Conclusion of overall system level stability in a grid scenario where many inverters are parallel connected requires the evaluation of GNC at many PCCs.

2.3.3.2 Methods for multi-parallel converters

A passivity based stability assessment method is introduced in [26], where the power stage filter dynamics and the control dynamics are formulated in a decoupled manner. This allows a clear theoretical interpretation of how the closed loop behaviour of the system is affected by control parameters and filter parameters; thereby aiding in stable control design procedures. Distributed power system operating in islanding mode (microgrid) is analysed in [27]. The inverters are operated in Master-Slave current sharing regime, where the Master inverter acts as a grid forming converter (voltage mode) and the slave inverters operate in current mode. An appropriate *dq* domain modelling for the Master-slave configuration is adopted and the GNC is applied for stability assessment. An Impedance based small-signal stability analysis of multi-parallel converters is applied in [28], this method does not consider the cable impedance between two local PCCs. This can provide incorrect predictions of overall system stability.

Alternative to the small-signal impedance approach, a classical eigen value based stability assessment is carried out in [29]. The method is coined as component connection method (CCM), where inverters are modelled as state space system and the overall state space of the power system is determined by how the inverters are interlinked. By checking the eigen values of state

transition matrix A, one can comprehend system level stability and perform root locus analysis to identify the impacts of controller gains. A CCM based impedance method is introduced in [13]. Complications in the power system topology can easily be handled with this method and a computationally efficient algorithm is presented to formulate the connection matrix.

2.4 Summary and future work

In this chapter, a review of stability analysis for DC systems was presented and the extensions available for AC systems were provided. The GNC method was applied to a three-phase grid tied inverter. The theoretical stability results presented in **D3.2** based on GNC were in harmony with the response obtained from time domain simulations; thus, establishing coherence between time domain and frequency domain interpretations. Simulations were validated by performing various test cases by altering the grid impedances and control parameters. The stability analysis encompasses crucial information such as phase margin which would be a suitable candidate for the formulation of norms and standards to address futuristic power electronic based grids.

3. Preparing the foundations of new approaches to voltage management on distribution systems

A new opportunity arises from the uptake of RES on distribution systems with *inverter* technology: the active management of local voltages. An inverter is a device that converts DC current to AC sinusoidal waveforms; in doing so the amount by which the current waveform may lead or lag the voltage waveform can be modified. In other words, the presence of inverter technology introduces the capability of injecting and absorbing *reactive power,* the quadrature component of complex power.

The connection of a RES, be that an electric vehicle (EV), an air-source heat-pump (ASHP), battery storage technology (BST) or photovoltaics (PV) will undoubtedly alter the *active power* demand profile planned for distribution feeders. Consequently, the status-quo of voltages on these feeders will also change. Controlling reactive power locally, and at source, will better equip the existing distribution network to host RES through prudent management of voltages and currents in the surrounding network. The question of how these resources could be configured to aid voltage management and stability will be explored in this deliverable.

Figure 10 illustrates the typical topology of an arbitrary LV feeder in which RES may connect. The voltage delivered from the MV section of network is boosted by means of a transformer with a fixed tap, usually changed seasonally. Several three-phase feeders may stem from this MV/LV transformer connecting multiple residential estates for example. The individual connection to a customer premises may be provided from one of three phases, allocated once at the time of installation.

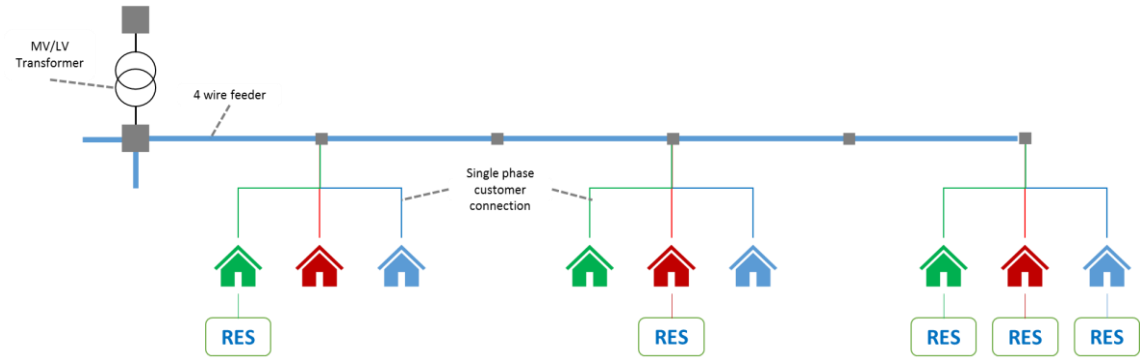

Figure 10 Three-phase unbalanced network topology with RES connection

The assumptions upon which networks of this type were designed are now called into question as RES penetration increases into the future. With increased demand further decrease in voltage magnitude is anticipated, and with generation potentially connecting to these sites the issue of voltage rise is also apparent. The *last mile* of network connections is unmonitored, save for the customer premises kWh usage, meaning that unrestricted connection of RES could potentially cause voltage or thermal problems that could go undetected. Investing in telemetry to every customer premises is impractical and relying on such a scheme for the active management of voltages is an over-engineered solution. The deployment of new concepts from this sub-deliverable and WP assumes the use of 5G capability. The objective is to provide a succinct, informed and practical approach for active voltage management. The concepts brought to bear throughout this WP will reflect on existing network codes and where required bring about recommendations for future network codes and ancillary services.

3.1 Background

To supply a voltage in compliance with European Standard (EN) 50160 [33] voltage management of distribution networks in Europe are operated at nominal voltages. EN 50160 defines several voltage parameters and was established to ensure the minimum expected voltage quality of these parameters is delivered by the network operator. For this WP, the voltage magnitude variation and the supply voltage unbalance are of interest. The standard states that mean voltage magnitude variations should be within +/- 10% of nominal and that the mean supply voltage unbalance across the three-phase connection is to be contained within 2%. Small deviations are

permissible if under 5% of weekly occurrences where this mean quantity is calculated as 10 minute rms value.

Regulation of voltages on distribution networks is achieved through the coordination of on-load tap-changers (OLTC)s transformers, capacitor banks, series reactors, Static VAr Compensators (SVC)s and static synchronous compensators (STATCOM)s. These are primarily installed and operated at MV level. On LV, which is the focus of this deliverable, the control of voltages at MV allows sufficient headroom for voltage drop assuming of course that only demand is being drawn on these networks.

When designing a distribution system, planning studies are undertaken that consider the characteristics of the load to be connected [38]. All LV feeders are rated to accommodate the maximum anticipated demand. Given that, from customer to customer, the profile of consumption varies, the criteria used to capture the maximum anticipated demand is the after diversity maximum demand (ADMD), where demand is aggregated by the number of customers along a given feeder.

This assumption is of interest to the area of active voltage management and more specifically this study will hone in on the load composition on which the ADMD is calculated. The electrical loads on consumer premises are categorised into three components: *constant impedance Z*, *constant current I*, *and constant power P*, this is known as the ZIP load modelling. Depending on the composition of the load at a given time, a change in voltage due to the presence of RES will affect the demand drawn at a customer premises. This may exacerbate the connection issue of the RES either by drawing increased current or cause voltage perturbations. In designing an active voltage management scheme on LV systems with significant RES penetration the ZIP composition is an assumption that cannot be overlooked. ZIP load modelling will form an integral part of the foundation of the AVM concept built here.

The reactive power capabilities of distributed energy resources have been recognised as having no opportunity cost, such as wind power [39], and the literature has taken to investigate possible ancillary service roles. The capability of an inverter may also be limited by the active power operation and the range of services should take stock of this limitation. Notably, different RES technologies will invoke differing challenges when connecting to the distribution system, primarily due to the active power supply (or drawn) by the connection. If there is an increased load the voltage may drop below satisfactory levels and may cause thermal limits to be breached, conversely, an active power supply may cause the voltage to rise above acceptable standards and the provision of reactive power at source may lead to congestion on the main feeder or the supply transformer. Voltage and thermal constraints are discussed in detail here.

3.1.1 Voltage Constraints

The main limiting factor in hosting generation on distribution systems is the issue of the voltage rising above rated limits [40]. Voltage rise results from the injection of active power on high impedance branches [41] i.e. where the resistance of these lines is no longer negligible and the respective decoupling of active power injections and reactive power injections to voltage angle variations and voltage magnitude variations, no longer applies. Differing from branch connections on transmission systems, distribution system branches exhibit lower reactance to resistance (*X/R*) ratios. The voltage rise complication is observable on branches where the *X/R* ratio is small (<5) and is worsened the further away the generation is from the last substation.

On the other hand, the shift to electrifying the transport sector will increase the demand on power systems. Impact assessments, like that conducted by [42] show that increased penetrations of electric vehicles on typical low voltage residential feeders will result in a reduction of voltage below the acceptable standards of [33].

Voltage regulation on the distribution system with distributed energy resources is further complicated by the interaction with tap changing transformers. Ensuring the end node receives an acceptable voltage is the primary function of a transformer within a substation. In this regard, the *sending end voltage* is usually boosted prior to the dispersion of power to multiple feeders. Yet, with RES now causing voltage rise and voltage reduction, the operation of transformers is perhaps pivotal in integrating more of these resources.

3.1.2 Thermal Constraints

A conductor can only conduct a current within its rated limits: if exposed to currents above this limit the result could be plastic deformation and the failure of the connection as well as other infrastructure. A conductor's capacity to carry power flows and ampacity (capacity to carry current flows) are dependent on the resistivity of the material and the cross section of the wire. Given the operation of power systems across three phases and by means of sinusoidal propagating waveforms the electric field and magnetic field effects of current conduction must also be accommodated by providing clearance and appropriate insulation. Conductor manufacturers specify the properties of their cables based upon these electrical effects [43], usually providing the expected ambient temperature and fault clearance times. A system operator abides by these calculations when planning and operating the network. Typically, the demand diversity and expected peak demand are two main considerations that determine the feeder ratings and selection of appropriate conductors. Load growth is also anticipated such that the ratings of transformers and conductors are oversized [38].

Although the conductor capacity and ampacity has been generously allocated, the connection of significant levels of RES to LV distribution feeders poses potential difficulties to the steady state operation of current flows. This is true more so for the RES that increases the active power demand of a customer, where unsatisfactory voltage drop is also an issue. On the other hand, where active power is now being injected by RES on customer premises, the management of voltage rise comes to the fore. However, managing the voltage constraint of the feeder with reactive power resourcing may, in fact, exacerbate the thermal constraint problem. This is due to the fact that the physical infrastructure of a distribution system influences the nature of power flows resulting from the active and reactive power injections. Due to the lower X/R ratios, managing the voltage constraints primarily through a reactive power source causes significant and unintentional reactive power flows, congesting branches and leading to higher system losses [44]–[47]. In the case of generation from a RES, active power curtailment, rather than reactive power control, is a likely outcome when managing a network of branches operating above the rated thermal limits [48].

3.2 Active Voltage Management - Concepts and Applications of RES technology on Distribution Systems

The original function of the distribution system was to accept power flows from the higher voltage transmission system and to distribute this power to the stipulation of connected customers. Nonetheless for economic, technical and legislative reasons there has been an increase in RES on power systems across the globe.

As international efforts continue to integrate variable renewable generators and other distributed energy resources including demand response, modern distribution systems are in a state of change. As the vision of the smart-grid is realised with growing impetus, distribution systems are shifting from their passive nature to a more active and involved role in hosting distributed energy resources leading to the concept of an *active distribution network*. The term active distribution network implies that the active and reactive power regimes of distributed energy resources are assumed to be controllable variables. In other words, both the active power and reactive power set-points of these RES resources are envisioned to contribute to **voltage and thermal constraint management**. Availing of this control and that of other controllable equipment, research into active distribution networks tackles many modern-day issues striving to bring about more optimal scenarios; maximising energy export in a dynamic optimal power flow approach [49]; maintaining voltage stability through reactive power support [50]; and minimising the negative sequence system voltages and network losses [51].

The concise review of the state of the art that follows narrows the applications of the active distribution network concept to the field of active voltage management.

3.2.1 State of the art

As the aim of this deliverable is to put forward the extensions to approaches of high RES contexts, a review of the state of the art seems prudent. Active network management considering the impact of new technologies connecting on LV residential feeders is topical in the literature. The following literature represents a small sample of work in this field. There are many applications of active voltage management to have arisen in this field. These can be categorised as **central** or **decentral** solutions.

3.2.1.1 Centralised solutions

A **centralised** solution, such as Optimal power flow (OPF), implies that telemetry is in place to communicate power flows and node information to a central point in the network. Here, decisions to control multiple set-points can be made with full observability of the network. OPF is used for planning studies as well as informing the operation of devices on power systems.

OPF is a technique that has been developing since early 1960s, first used as a method of determining the economic dispatch of generators [52]. Later in that decade, [25] and [26] formulated the power system operating conditions as a general mathematical programming problem. Since then progress has manifested with solutions of larger and more complex problems with the help of improved computational power [55]. In addition, the use of OPF has developed from its traditional use of minimising cost on a power system, to investigating other objectives; such as active power losses [56], the placement of components for voltage support and voltage balancing [57] and the optimal allocation of generation [58].

Today, with the inclusion of distributed generation on a power system, the ability of AC OPF to capture the reactive power capabilities of these units has been used to investigate other objective functions on MV systems; maximising distributed generation capacity [59], minimising energy losses [60], minimising reactive support from a transmission system [61], minimising active power curtailment [62], maximising reactive support from DG [63] as well as encapsulating firm and non-firm planning applications of distributed generation [64].

Other central approaches outlined by [65] include: metaheuristic techniques such as genetic algorithms, simulated annealing and particle swarm optimisation. These techniques discern solutions through a self-learning approach. Uncertainty modelling is yet another consideration of use to LV network solution; a Monte Carlo simulation [66] will iterate through multiple solutions that are based on probabilistic analysis of the controllable variables and unknown parameters.

The information gap decision theory IGDT is used to accommodate uncertainties without knowing and/or assuming a probability density function. For example, in [67] IGDT seeks to protect the AC OPF solution against unknown risk using flexible decision variables of RES reactive power provision and active power from demand response, allowing for the uncertainty and variability of wind generation. This work determines the flexible dispatch of demand response nodes and RES reactive power provision ahead of time, such as to maximize the robustness in case a wind-forecast is under estimated and to minimize the opportunity function in case a wind-forecast is over estimated. Using these flexible components of active power and reactive power on the network, a quantitative answer was determined of how poorly predicted a wind forecast may be, while still adhering to the tolerance set by a system operator.

Perhaps representing the forefront of the SoA, [68] proposes a centralised control algorithm for the control of EV charging points to simultaneously manage both thermal and voltage constraints. This method is being trailed on nine UK residential LV networks indicating an advanced TRL beyond early-concept-level found in other literature. Tackling the same issues, [69] develops a rolling multi-period optimisation strategy to control electric vehicle charging on sub-urban LV feeders, guaranteeing the voltage requirments of EN 50160 as well as thermal branch limits.

The CAPEX associated with centralised solutions is substantial: investing in sensors, measurement and communication systems. The deployment of centralised strategies requires dedicated telemetry from every affected node to the central point of calculation. On LV networks where the uptake of RES is topical many solutions realise this shortcoming in the central solution and have developed solutions that are less dependent on telemetry.

3.2.1.2 Decentralised solutions

A **decentralised** (or distributed) solution is one that takes dispersed actions across a network without complete observability in an autonomous or operationally tuned manner, with limited or no telemetry.

In [70] a method for real-time active network management control is put forward to maximise network wide energy-yield, and is tested on a section of MV network with distributed generation. The approach operates an OPF technique at defined intervals taking measurement samples to

minimise active power curtailment of DG as well as an independent formulation of target voltage deviation.

Applying convex relaxation to the centralised optimisation approach, [71] put forward a distributed method for voltage regulation with the aim of loss minimisation. Here neighbouring nodes communicate their *Lagrangian Multipliers*, calculated to minimising their corresponding voltage angle difference. Each demand point in the tested networks was assumed to have both energy storage devices and solar generation capability.

The strategy put forward in [72] aims to account for the impact of structural changes in the network. Reactive resource within this voltage control scheme are used to maximise voltage support. Coordinated control decisions are based on electric distance among reactive power resources and are enacted assuming the use of a DSM. Reactive power voltage sensitivities are discerned from the inverse Jacobian matrix and can be used to partition the network into zones in which reactive power resources can act and have an effect.

The method in [73] uses network sensitivities to determine the generator with most influence so as to vary the reactive power exchanged between these generators and the network, maintaining the OLTC in a fixed position for specific load conditions. This concept of exposing the distribution system to voltage fluctuations from the transmission system by means of a fixed tap position was also examined by [74] in relation to of wind farm reactive power capabilities. The outcome of this work was to capture expected complex power operational regions at the HV/MV exchange point.

In [75] a community energy storage is investigated to mitigate voltage rise in an unbalanced LV section of network, where the connection of PV systems is predominantly on a single phase. This work features a power balancing algorithm tested under variable load and PV generation profiles to inform a charging and discharging schedule for battery storage technology. Analysis of the approach in a dynamic model showed that mitigation of a neutral current is achieved.

The retrofitting of an electronic tap changer in a LV transformer is the focus of [76], where reactive power injection from PV inverters is utilised for active power loss minimisation. Similar to [46], the instruction to tap up or tap down is not only influenced by the secondary voltage of the transformer but also the flow of complex power observed at the transformer.

In [36], a local reactive power control method is put forward for overvoltage prevention from PV. This approach highlights the varying voltage sensitivities at the connection point of a PV due to the impedance of the line seen from that point. As such, varying droop slopes are applied dependent on the distance of the PV connection to the supply transformer.

A droop slope is a concept utilised in conventional generation units for frequency stability, however in this context it pertains to the variation in voltage and subsequent provision of reactive power. This volt-VAr droop control concept is increasingly being applied to the active voltage management challenge from RES penetration. It is, for all intents and purposes, an autonomous solution and should not require dedicated telemetry. Many techniques have been proposed to assign the slope to these curves.

In [77] droop control was instigated for PV inverters by means of a multi-period three phase unbalanced power flow AC OPF. This type of solution that relies on an AC OPF engine has the distinct advantage of capturing the voltage sensitivities of active power and reactive power injection of RES.

[78] presents an active management technique for mitigating overvoltage due to PV. The approach operates on an LV feeder to manage both active and reactive power resources of PV. Uniquely this approach does not rely on a network model or a converged power flow solution; it is purely acting on voltage signals and coordinating actions in a systematic fashion to curtail and restore active power while also utilising reactive power.

3.2.1.3 Bottom up demand modelling

One of the shortfalls of research into RES integration at LV is in the consideration of the intrinsic *voltage sensitivities* on these feeders. Voltage sensitivity is a product of the physical infrastructure the network embodies but is also dependent on the load composition and this fact is often overlooked. Proposed solutions for RES on LV feeders must aim to capture these aspects.

In modelling the demand at this disaggregate level there is a simple question to be answered: Do these models epitomize occupancy patterns and behavioural characteristics, and further, is the load compositions an accurate representation of the devices assumed to be drawing current?

Collins et al. present a bottom-up modelling approach to capture a realistic profile of residential loads [79]. When used in a voltage management strategy, bottom-up demand models grant new insight into residential voltage profiles through the provision of high-resolution simulated residential energy consumption. For example, in one application of voltage control for power reduction for UK residential customers [80], losses are reduced and the voltage profile improved within the LV network. In another approach, price-based automatic demand response strategies were proposed [81].

Capturing both the instantaneous and temporal effects of a LV voltage management strategy, in [82] a bottom-up demand model is used to assess the conservation voltage reduction concept. A feature of this work is the meticulous consideration of constant power, constant impedance and constant current loads in energy consumption. The conservation voltage reduction strategy, tested on an urban feeder, resulted in a decrease in energy consumption for open-loop loads, while closed-loop loads exhibit constant or increased energy consumption. Lastly, an increase in line losses was observed due to power electronic and thermostatically controlled loads drawing more current.

3.2.2 Summary

Clearly, by way of the examples in Section 3.2.1, many assumptions are necessary in the modelling of an active distribution network. Whether executed assuming central or decentral approaches, the concluding findings should reflect the realistic capability of a DSO and existing practical approaches used in a control centre. The needs of a DSO are wide-ranging as voltage constraints and thermal constraints are to be upheld in the presence of RES. With the impending uptake of 5G communications, the dynamic control of voltages using inverter based RES is possible. This combination provides the capability for an assortment of ancillary service provision to the network.

The essential assumptions that have been identified and are to be adopted for the context of this work with the anticipation to 100% RES are the:

- dual management of current and voltage,
- realistic capabilities of the inverter and dependence on RES technology,
- accurate consideration of ZIP composition of the demand,
- accurate representation of the network impedances and topology,
- realistic expectations for telemetry,
- existing infrastructure and methods used by DSO,
- multi-objective capability enabled by ICT.

A substantial change is happening at consumer and generator level: if utilities maintain the same principles at the foundation of their system then voltage and thermal constraint breaches will be common place in an unstable system. There is now an opportunity to answer the varying and wide-ranging needs of distribution system feeders with increased uptake of RES towards 100%, by capitalising on the inverter technology and deploying solutions using 5G communications.

3.2.3 Conclusion

There are many subtleties to the range of solutions in the state-of-the-art, yet there are common threads throughout. The context in which the works were completed guide the application and their applicability, in other words, there are no all-encompassing solutions for every voltage level. The proposed technique for SV_B draws upon the objectives common to the research interests and network operators, and delivers a **modelling approach** to facilitate **any** objective.

The technique developed in SV_B, the **active voltage management using dynamic management of the inverter technologies**, is an *offline* analysis using optimisation techniques that determines the static-set points that can be programmed into an SSAU *online* and in the field. This choice of adaptation gives all the benefits of a central approach, while providing the means to deploy the solution in a decentral manner.

An **optimisation** technique gives clear advantages over the deployment of static set-points across the system. The acuity of the OPF approach ensures steady state stability providing the formulation of the problem is expressed realistically, the parameters comprising the network data are exact and the equations of power flow are accurate. The expansion of mathematical formulations of the model are available in D3.2.

A **multi-scenario** OPF offers the advantage of reduced computational burden, compared to a probabilistic based approach. As the focus of this deliverable and SV_B pertains to the uptake of RES on LV networks, the consideration of the ZIP composition of demand is essential. Another unique aspect of the proposed technique is the multi-scenario identification of significant ZIP demand compositions. This capability enables a satisfactory and optimal result for the extensive variation in demand type on distribution feeders. The multi-scenario identification process is further expanded upon in D3.2.

3.3 Active Voltage Management with dynamic management of inverter based RES– Proposed Technique for Sv_B

Only by engaging with the inverter based RES technology will the varying and wide-ranging needs of LV feeders with increased uptake of RES towards 100%, be met. The vision to emerge from **Task 3.1** is that normal procedures of DSO operation will continue and that static set-points will be enforced.

The **Active Voltage Management** (AVM) approach proposed here reduces the problem to a local objective for each RES unit: to target a single voltage value and to maintain a relationship between the reactive power provided and the voltage observed: known as a *volt-VAr curve*. This target voltage will be obtained using the 3-OPF tool, an AC OPF centralised approach that is capable of multi-period analysis.

Optimisation is a key component of active voltage management using dynamic management of the inverters. Deployment of an OPF technique at LV is complicated by the increase in nodes and connections, all requiring a measurement if the solution is to be of any practical use. Where there is a lack of telemetry and measurements, static-set point operation or a *fit-and-forget* approach is implemented. Static set-points offer simplicity of deployment and assurance of consistent operation, albeit sub-optimal.

Calculation of the desired target voltage of each RES is done offline for multiple periods, multiple ZIP composition, and multiple-objectives. The expectation of T3.2, D3.2 and the trial of WP5, is for a DSO to request the RES unit(s) to fulfil any desired objective modelled: this may be a decrease in active power losses [45], unity power factor (normal operation as done in Australia [76]), congestion reduction [46], voltage unbalance correction [83], transformer flow reduction, provision of reactive power support [61]. Figure 11 illustrates the *offline* modelling phase and the *online* deployment phase of the AVM concept.

Offline Modelling Phase

In the Offline Modelling Phase, the LV feeder is represented in the 3-OPF tool comprising of the active power and reactive power capability of the RES technology, impedance data of cables and length of spans and phase allocation of demand customers. An aggregate ZIP load composition of all customers will be calculated based on the bottom-up demand modelling approach of [81]. From this aggregated model points of interest will be identified and these will form the multi-

periods to be analysed in the 3-OPF tool. Each objective analysed will provide an optimal voltage target for each RES and further post-processing will determine the volt-VAr curves' incline. An example case study, with contrasting objectives of a DSO, is outlined in D3.2.

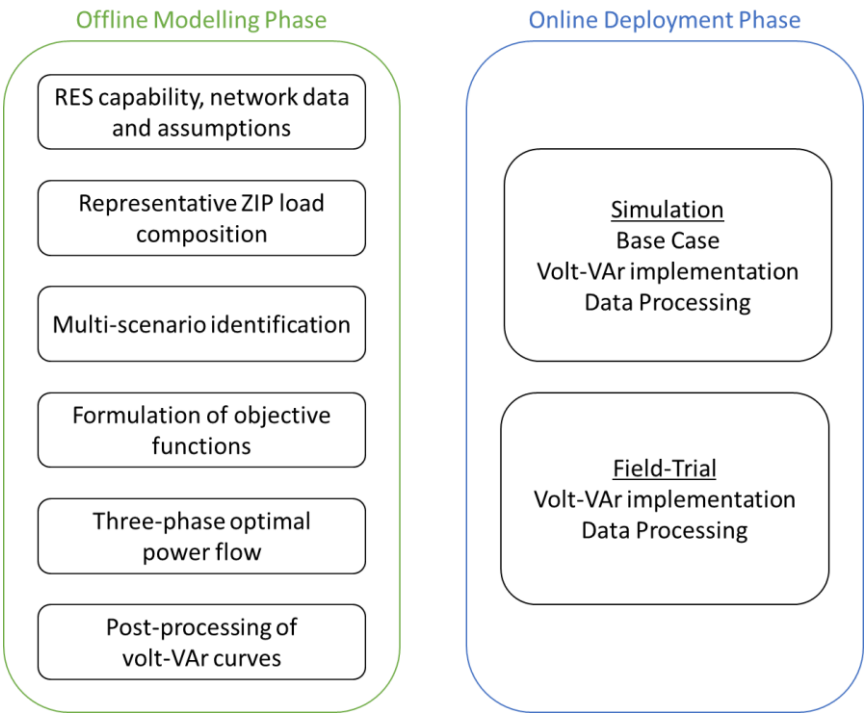

Figure 11 Offline Modelling Phase and Online Deployment Phase of AVM

Online Deployment Phase

In the Online Deployment Phase, the RES units will target the voltages and follow their volt-VAr settings in further time-series simulation. Then a comparison to a base case fixed power factor mode of operation is possible to reveal the advantage of reactive power control of RES. This paves the way for a field trial in WP5. In daily, seasonal, hourly or weather dependant operation of the distribution network, the DSO will have a choice of set-points that can cater for the most critical constraint at that time. Going one step further, there is opportunity also to configure the RES units to act in autonomy and autonomously.

The intention here is to develop a **range of modes** in which a RES unit can operate depending on the objective of the DSO. A noteworthy conclusion of future deliverables will be to ascertain the variations in target voltages and the incline of the droop slopes from objective to objective. It may then be possible to discern from these findings a general solution or *rule-of-thumb*, for RES setpoint configuration on any given network. These findings will then link to T3.7 and D3.7, as recommendations for alternate network codes.

3.3.1 3-OPF Modelling Tool

In this section, a brief overview of the 3-OPF modelling tool is provided. 3-OPF is a tool developed by the Energy Institute at University College Dublin [84], built in Pyomo [85] and written in Python scripting language [86]. The tool builds upon the 4-conductor current flow formulation [87] and the work of [88], constituting a three-phase unbalanced optimal power flow approach.

The assumption of a balanced network permits the analysis of an OPF using a single phase and carries well for studies on HV and some MV networks. While single phase OPF is often sufficient for studies carried on balanced networks, studying LV distribution feeders necessitates 3-phase unbalanced models. The 3-OPF modelling tool enables a three-phase analysis, an essential feature that captures the dispersion of power flows; this is necessary as on LV feeders the anonymity of demand and disaggregate usage at this level is a critical detail for voltage management.

3-OPF modelling approach converts the power generated, transferred or consumed by the equipment at each bus and phase in the network to current components. The tool has been designed in a modular manner; from study to study the components contained within the model can vary. This is of critical importance to the chosen technique, as the constraints at play from simulation to simulation vary, further details are outlined in D3.2.

Figure 12 illustrates the modular design of 3-OPF illustrating some of the modules that can be included. For example in other work in progress for the H2020 Real Value Project [84], aside from modelling the equations of power flow on an unbalanced network, a module of 3-OPF captured the heating requirements of households. This module required detailed modelling of heat exchange and thermal embodiments of a customer premises in addition to capturing behavioural characteristics.

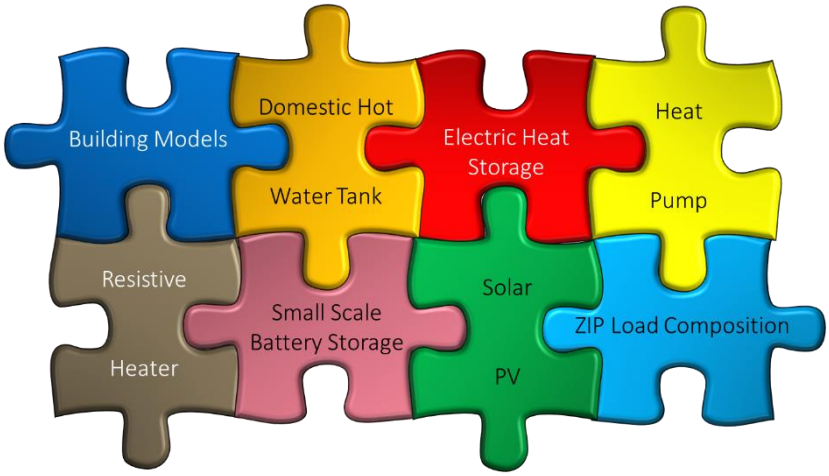

Figure 12 3-OPF modular design

The AVM strategy designed in WP3 requires no insight into the internal temperature of households and so these modules are switched out without affecting the core calculations of the 3-OPF. What is of importance to this study is the ZIP load composition of the demand, the characteristics of heat pumps, photovoltaics, vehicles to grid capability and small-scale battery storage and so these modules have been implemented. The 3-OPF can switch in and out these modules with ease, enabling differing RES technology to be analysed together or individually. This is an important consideration, as progressing to field-trials of **WP5**, differing technologies are to be considered but may not be present on the same feeder.

3.3.2 Volt-VAr Curves

The output of the AVM offline modelling phase will be a selection of volt-VAr curves. The target voltage of these curves will align with unity power factor, i.e. the RES will neither inject nor absorb reactive power. An inductive power factor will be chosen to reduce the voltage should the voltage measurement at the location of RES be above the target voltage of the objective. Conversely, a capacitive power factor is chosen to raise the voltage at the terminals of the RES, should the voltage measurement present a voltage lower than the target voltage of the objective. The rate of change of reactive power with respect to the voltage deviation will be tuned and ascertained in the post processing step of the offline modelling phase. Figure 13 shows an example of a droop slope illustrating the task of the 3-OPF tool, to ascertain the voltage setpoint and slope along which to inject and absorb reactive power.

Of note from Figure 13 are the bounds within which the 3-OPF tool constrains the reactive power import/export and the voltage. Whereas the upper and lower voltage limit is assigned based on grid code requirements, the upper and lower reactive power bound of the RES is dependent on the capability of the inverter. The reactive power capability is likely to change from one technology to technology, giving further justification to the choice of simulation environment required to develop the AVM approach.

The arrows illustrated in Figure 13 show the degree of freedom of the decision variables; to determine a single target voltage for multiple-scenarios and a slope unique to the placement of the RES device on the LV feeder. Results of a case study are presented in **D3.2**.

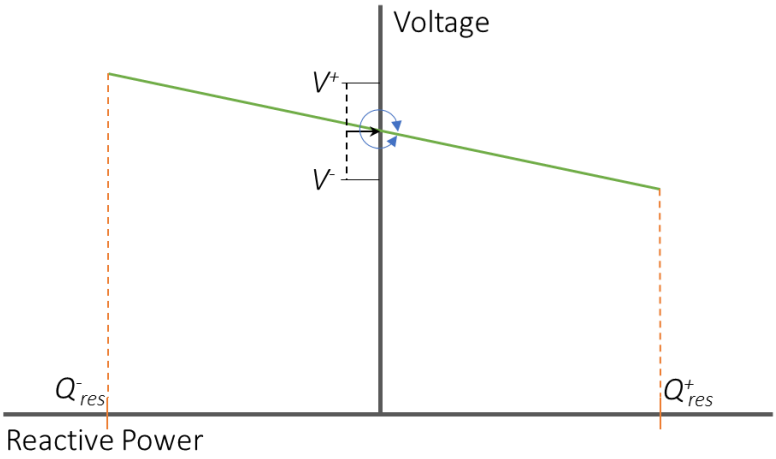

Figure 13 Example droop slope shown with upper and lower voltage and reactive power bounds

3.3.3 Network Models

The generic formulation and modular nature of the 3-OPF tool permits the tool to run simulations on different networks with ease. This WP and the results of D3.2 act as a proof-of-concept of the proposed AVM technique and will use a network model that represents a real suburban LV feeder provided by ESBN. The LV feeder is situated in Ireland and has been used for various network studies ([42], [69], [81]–[84], [88]). The feeder steps down from 10 kV network via a 10 kV to 400 V and 400 kVA transformer. An underground cable serving nine mini-pillars distributes power via a single-phase connection to 74 customers. In **D3.2**, the phase allocation of these customers is provided as well as the cable types are presented. In **WP5** network models will be provided by ESBN on which to run accurate simulations of the differing RES technology that is taking part in the field trial.

3.3.4 Conclusion

The justification of the AVM approach and simulation environment of SV_B has been outlined in this section. The offline modelling phase encompasses the complex environment the voltage control algorithm is to operate. Using a centralised modelling approach the 3-OPF tool provides the platform in which the volt-VAr curves are calculated. Any objective that can be formulated within the realm of AC OPF analysis can be investigated, producing an objective governed volt-VAr curve. These curves constrain the operation of the units based solely on their available reactive power capability and the present voltage measurement. The output of the offline modelling phase, provides a straightforward relationship for the RES units adhere to, such as to fulfil the objective that realising the target voltage will bring about.

The consequence of this is that in an online deployment phase, either through further time-series simulation (as per **D3.2**) *or* in a field-trial environment (**WP 5**), the problem is reduced to a linear relationship between the target voltage of the RES unit and the reactive power output of the unit. This provides the means to operate in a decentralised manner where the complexity of AC power flow need not be calculated on a continuous basis. This offers a vast advantage in terms of computational time for deployment on systems with up to 100% uptake of RES.

Reducing the *offline centralised analysis* to an *online and decentral deployment* through the means of optimally chosen volt-VAr curves, gives a practical means to facilitate the objectives of the DSO. These objectives could, in future, be in response to market mechanisms or simply to regulate the network in the most efficient way possible. This capability is increasingly important considering that future voltage management concepts should provide the means to making best use of the finite capacity of distribution networks.

3.4 Conclusion

The assumptions that ought to be considered in regulating the voltage on an LV network with RES penetration have been investigated. A modelling approach that looks toward a realistic deployment of future trials has been brought to light. On review of relevant literature, it was determined that an AC OPF approach is best suited, in order to capture the inherent sensitivities of non-convex power flow solutions while also providing the means of deployment with 5G communication. The offline modelling phase provides the means to investigate any objective of the DSO, by actively regulating voltages at the terminals of RES units and engaging the reactive power capabilities of associated inverter technology.

A multi-scenario approach is adopted in D3.2 that encompass the variation in voltage sensitivities due to the disparate composition of demand on an LV feeder. To this end an aggregate model of customers is used, that comprises a bottom-up demand-modelling approach. The 3-OPF application presented in this deliverable is used to reveal the target voltages and related droop slope settings that satisfy the objectives of a DSO while accommodating RES on distribution networks. The results of the AVM technique in a simulation environment are provided in D3.2.

4. Implications of voltage scenarios SV_A and SV_B

At present, no other method other than the DVSM, has been proposed for enabling the stability of the voltage in a distribution grid with up to 100% RES. In a distribution network with increasing percentages of RES penetration, DSOs either need to use on-load-tap changes (OLTC) transformers to stabilise voltage or introduce inverters as described in this report. While OLTC might provide a short to medium term solution, we endeavour in RESERVE, to stabilise voltage in the RESERVE scenario without using neighbouring networks, which may or may not have power (because of the extreme volatility of high RES power generation sources) to stabilise neighbouring networks, leading to instability which can be balanced using inverters.

The AVM technique optimises the reactive power setpoints of RES inverters to minimise the network voltage imbalances, decrease active power losses, maximise active power component of the RES and defer network investments for the above reasons.

We provide here an introduction to the consequences of introducing inverters to distribution grids at a full scale commercial level, as it is needed as the basis for the RESERVE project work on network codes, on ICT requirements and on CSR and sustainability issues.

Introducing this technique requires upgrading some of the existing components of the DSO networks (e.g. the SSAU's and the control centres of DSO's and the introduction of a new generation of inverters with communications facilities. The use of the new technique could facilitate the emergence of new markets for voltage stability monitoring and voltage management and the emergence of aggregators as service providers. It enables prosumers to play a more active role in the power markets. Each of these features is described in more detail in this section.

4.1 Implications of new technique in the context of working distribution networks

4.1.1 New Grid codes are needed

The technique requires the use of information currently only available to DSO's or TSO's and the introduction of **new network codes**. These codes relate to the level of control of reactive power regulation permitted for a RES connection, switching from a conventionally passive nature to a dynamic and interactive method. The codes should allow the DSOs to perform decentralised control of the inverters for voltage control and voltage management.

4.1.2 New inverters are needed

Assuming such network codes or norms are put in place, **new inverters** will need to be introduced to the market.

These new inverters implemented in SV_A use-case need to have the communication ports which will enable them to communicate with the SSAU. They need to have the WSI functionality for impedance measurement and a VOI controller, which receives control set points from the SSAU. A modification in the inverters embedded hardware is required for the direct activation of the SV_A technique through software updates. Hence, the change is expected to take place at first for newly installed inverters.

The new inverters implemented in SV_B use-case require only communication ports. A one-off approach could be used to the upgrade of the inverters by pre-programming them with the new functionality. However, this approach means that the algorithms used cannot be changed in any way without physically going to each inverter and uploading new software to it. An online ability to upgrade the software of inverters offers more flexibility in their future use.

Once the network codes or norms have been agreed at DSO level (either individually or in a harmonised manner for all DSO's), equipment manufacturers need to bring new inverters on the market which have the communications facilities to enable the use of the DVSM and AVM chosen here.

4.1.3 New communications links are needed

It requires **communications links** between the inverters of all RES units and the SSAU. There might be only one inverter for several RES units but typically one inverter is present for each RES unit. Larger RES farms already have such communication links and they have the capability to control reactive power and receive instructions to alter their reactive power. There is currently no communication link in place between RES units and their inverters if there are any inverters connected to them for small scale, LV prosumer installations, and the SSAU.

4.1.4 New control functionality is needed

In the **SSAU**, the voltage stability monitoring algorithm (for implementing DVSM) should be added as an additional software component or as a new control system. The algorithm in the SSAU basically requests the inverters to calculate their impedances and send it back to the SSAU. The stability is evaluated at the SSAU and then a corrective action is sent back to the inverter if required.

In the **SSAU**, the new functionality of the volt-VAr curve (for implementing AVM) needs to be added to it as an additional software component. Either the SSAU manufacturer needs to implement the new functionality as a software upgrade to the SSAU or a new control system, such as the **SERVO system** being developed by ESB in Ireland, needs to be added to the power network to perform this function for the SSAUs.

The SSAUs are connected currently to the DSO network and already have the appropriate communications links. The **DSO control system** needs to add new functionality to its system, probably as software, to take the new information regarding the active voltage management into account. The SERVO system could be used for this purpose.

We start by providing an example of how commercialisation of new inverters could take place and then define the network code, ICT and sustainability consequences.

4.1.5 An example of commercialisation for a similar product

The authors would like to present an **example scenario** leading to the commercialisation of the research results, based on the definition of the UL norm UL 1691 [30], [31] which was applied and commercialised in a similar context. In the UL scenario, the PV inverter installations in the domestic LV circuit in the US are expected to have an arc fault circuit interrupter (AFCI) functionality. The AFCI detects and interrupts possible DC arc faults in the PV inverter, to prevent fire hazards, by switching it off. The AFCI tool can be construed as an important ancillary service which enables safe operation of PV installations. Every inverter sold in the US must have this functionality and the introduction of this new norm provided the basis for the commercialisation of these research results.

Analogously, this RESERVE WP envisions a future in which the PV inverter, the WSI tool and the VOI controller have ICT functionality to enable them to communicate with the SSAU. RESERVE anticipates that this **ICT functionality is specified as a standard** or norm for manufacturers for the design of these components. The RESERVE project aims to bring about such standardisation, paving the way for commercialisation, as enhanced harmonised network codes and ancillary services definitions.

4.2 The implications of the new technique for ICT

Assuming such standards are put in place, new inverters will be introduced to the market. These new inverters need to have the WSI functionality and a VOI controller, as well as the communication ports which will enable them to communicate with the SSAU. This enables the control of voltage stability in a 100 % RES network as defined in this report.

RESERVE is investigating and defining the ICT functionality required to connect inverters to the SSAUs by implementing the DVSM and AVM techniques. ICT requirements relate to the commercial context in which the voltage stabilisation is undertaken. The current DSOs could undertake the techniques for voltage stabilisation or it could be undertaken, when regulations permit, by new distribution system aggregators.

For both DSOs and aggregators using the DVSM and AVM techniques, the following requirements apply:

- The **volume of data** to be transmitted from the individual inverters to the SSAU is small. Although the voltage and current data recorded by the local controller hardware is high, the WSI tool performs curve fitting and send only few numerator and denominator coefficients of the fitted function. See D1.3 and change

- The **latency** of the communications link is not critical. Single measurements should be received once per hour by the SSAU.

- However, **data integrity** is critical. The importance of receiving the messages as sent is high. The impact of receiving incorrect data on voltage stability, due to wilful manipulation of the data, or to faults, would be high, potentially destabilising the power network and leading to black out situations or voltage fluctuations.

- The **number of new inverters** that would need to be connected to the SSAUs is potentially very high – a typical household might have one inverter each and a distribution network would have hundreds of thousands of households. The economic viability of using power line communications or other fixed line communications to the inverters is likely to be low. Mobile solutions are likely to be the most favourable option.

- The **inverters need an IP address** so that the SSAU nodes have an up to date map of the physical location (at neighbourhood level) of the inverters connected to it. The inverters are stationary. An inbuilt **location check** in the inverter communication system could prevent the use of incorrect mappings of inverters to SSAUs or help detect data manipulation.

For aggregators, the following additional requirement applies:

- An **aggregator** is likely to need their own be-spoke connection to the inverters they control independent of other links from the same inverter to a neighbourhood DSO. This creates a need for secure, private communications network for aggregators.

- The aggregator might be acting on behalf of the DSO and will need network impedance information to do this.

RESERVE plans to run a field trial of the use of the active management technique in Ireland during 2018. Two trials using two different technologies are planned – PV and Vehicle to Grid trials. A common messaging technology like MQTT (http://mqtt.org/) could publish, once gathered, the readings from the target inverter to an MQTT broker. By doing this it would allow more than one research concept to subscribe to the message broker for the stream readings and enable the implementation of a common interface on the application services that provide the data for the research concepts.

4.3 The network codes and ancillary services implications

One of the goals of RESERVE project is to develop harmonised network codes and new ancillary services. An initial analysis and overview of the distribution network code of ESB is presented [32]. The field trials of both the voltage scenarios are going to take place at the Irish trial grid, therefore, the Irish grid code is brought to focus. Then the implications of network codes and ancillary services for the two voltage scenarios SV_A and SV_B are documented.

4.3.1 Status of network codes

Currently, the PV inverters in LVAC grids are not controlled by the DSO operator. The DSO operator may or may not provide real and reactive power set points but does not perform any control algorithm with the inverter to modify its behavioural. The control of LVAC feeder is done in a centralised manner though the tap changing mechanism of the OLTC.

The power factor for Irish distribution grid must be strictly between 0.90 to 1 (DCC6.9.1 [32]); the system is expected to be inductive where reactive power is only absorbed. This condition needs to be relaxed for the envisioned futuristic grid. The new LV grid code VDE-AR-N 4105 in Germany is formulated to support the penetration of PV [34]–[36]. The power factor in German LV grid according to this standard can vary between 0.90 lagging (inductive) to 0.90 leading (capacitive) based on the active power change [34]. This will enable the PV inverter to either absorb reactive

power (when voltage is higher than nominal) or inject reactive power (when voltage is lower than nominal). Additionally, under this paradigm, the local inverters provide an ancillary service known as fault ride through (FRT), where the inverter injects reactive power under fault condition to stabilize the grid voltage [34], [36].

4.3.2 Network codes and ancillary services implications of SV_A

In the futuristic grid with nearly 100% RES, due to large number of tightly coupled inverters in action, the centralised approach may or may not work. DSOs must control the inverters in a decentralised manner. Therefore, grid codes must allow DSOs to have communication with the residential PV inverters.

We bring the standard DPC4.2 to focus which complies with the EN 50160 standard approved by CENELEC [33]. A 10% voltage fluctuation is allowed in this system. DCC6.8.3 provides information on voltage flicker and harmonic distortion at each harmonic. Since the methodology of impedance identification in the project RESERVE involves the injection of pseudo random binary sequence (PRBS) signal into the inverter controller, the inverter injects this noise into the grid for a brief time frame. While performing trials at RWTH laboratory and field trials in Irish grid, the harmonic distortion should be computed to observe if it satisfies the present standards (DCC6.8.3 [32]). In case of minor deviations from the current standard, minor modifications in the grid codes that are required need to be identified after the deliverable trials.

Through the results presented in the deliverable D3.2, an initial glimpse on how phase margin or gain margin could be standardised is obtained. By the completion of task T3.3, the minimum amount of margin that the system must possess will be specified. Based on this minimum margin, the algorithm implemented in SSAU would communicate the inverters the needed impedance manipulations to maintain margins.

Ancillary services are those services or equipment which help in autonomous functioning of the power system such as frequency and voltage regulation. The PV inverter itself which provides voltage stability support is an important ancillary service. The definition of stability analysis and control based on VOI increases the dependency on ICT infrastructure and other ancillary services. The WSI tool which is required to measure the grid and inverter impedance is an important ancillary service present at the customer end. Similarly, the VOI is an ancillary service which is local to the inverter.

4.3.3 Network codes and ancillary services implications of SV_B

The introduction of the new active voltage management technique implies that DSOs need to develop a mechanism for harmonising network codes at DSO level or the new network codes need to be agreed individually with each DSO. We think promoting harmonisation among DSOs is a better approach for getting the proposals on new network codes and ancillary services accepted for a Europe wide implementation of the voltage control concepts defined in WP3. In the future deliverables of WP3 and WP6, more work on this topic of DSO harmonisation will be carried out.

The introduction of the new active management technique would **enable the equipment of the DSO to conform** to the existing harmonised European level TSO network codes (e.g. maintaining 230 V +/- 10%). Current DSO specific codes already conform to such standards.

In the current sets of network codes, support for following the volt_VAr curve needs to be introduced.

An objective governed voltage control will serve an important ancillary service provision. The possibility of issuing voltage set points to individual RES connections will coordinate sections of distributed grid toward a single objective. In **D3.2**, the minimisation of active power losses and minimisation of voltage unbalance were achieved using AVM technique of SV_B.

With the definition of numerous capabilities in AVM technique, the control increases the requirement on ICT infrastructure and other ancillary services. The AVM technique results in the steady-state provision of balanced voltages on LV residential feeders, an important ancillary service present at the customer end.

Field trials in Ireland of inverters with appropriate network codes

In the RESERVE project, we have planned to undertake field trials of the DVSM and AVM techniques in the distribution grid of ESB and have undertaken an initial study of the impact of the technique on the relevant European network codes.

4.4 The sustainability implications of the new technique

The use of inverters may lead to the creation of a market for aggregators to provide voltage stability services locally, nationally, and internationally leading to a significant change in energy market participants and organisation.

4.4.1 The role of prosumers

The inverter connects the private PV power generation with the power service providers. Some loads in the households could be DC loads with rectifiers.

Prosumers could sell the capability to use their PV installations as part of the service of stabilising voltage of a DSO, or an aggregator, to other power providers. This increases the options for the participation of prosumers in power markets.

4.4.2 The emerging market for voltage stability and management services

This will serve a new market for voltage stability and management services, not existing today, as currently power providers can rely on neighbouring networks to help them stabilise their voltage. This market will grow as inverters are introduced and connected to the SSAUs. The currently used techniques does not always work was demonstrated when a single power interconnector was disconnected to enable the launch of a new cruise liner on the river Elbe in Germany, leading to a voltage instability which caused a black-out in much of northern Europe [37].

The voltage management services are currently performed in a passive/centralised manner. It is controlled up to MV and then the planning of the network facilitates a voltage drop. With the connection of RES, the possibility of voltage rise, and thermal constraint breaches through poor voltage management, is introduced. This generates the need for a new market for active voltage control. This market will develop and grow as inverters are introduced and connected to the SSAUs.

Such a market could emerge first in countries already having a high penetration of RES, such as in Germany. The development of the SERVO system in Ireland gives the Irish DSO, ESB N, the possibility to be the first DSO to introduce such services and markets.

4.4.3 The emerging market new generation of inverters

A market for a new generation of inverters will also be created. This market is likely to be developed over the next 5 to 15 years. New housing estates could be built based on the introduction of inverter technology. This would enable a transition to the use of inverters and provide the new house with enhanced environmental sustainability as the use of inverters enables the use of currently unreachable levels of RES power generation. The introduction of inverters is likely to take place over many years, probably over several decades.

4.5 Summary

Implications of the technique for ICT, sustainability, network codes and ancillary services were documented.

The implications for the existing power system have been recognised as well as the identification of the implications for ICT. The SERVO system, developed by ESB in Ireland, can provide the new control functionality within the context of the Irish field-trials. Relevant network codes that the DVSM and AVM techniques could, in future, support have also been identified, through the provision of ancillary services.

However, new network codes are needed to administrate the use of reactive power control of inverter style RES, in particular for small-scale installations at LV. A look to the sustainability implications of the new technique identified the role of the prosumer, reveals the possibility of emerging markets for both voltage management services and a new generation of inverters.

5. Conclusion

This deliverable concludes ***T3.1 Preparing the foundations of new approach to voltage stability and regulation***. This deliverable addresses the motivation for advanced decentralised techniques in voltage stability monitoring and voltage management. The proposed methodologies are DVSM and AVM respectfully.

Voltage stability concept for DC systems based on Middlebrook theory were reviewed and an extension for the LVAC distribution grids based on GNC is proposed. The non-conservative nature of the GNC theory allows determination of system stability. The time domain simulations and theoretical formulations based on the proposed methodology were validated **D3.2.** Definition of grid codes for stability monitoring of futuristic grids with high penetration of RES based on system stability margins will be recommended.

Voltage management methodologies were overviewed and the active voltage management approach is proposed in this deliverable. A modelling approach that looks toward a realistic deployment of future trials has been brought to light. On review of relevant literature, it was determined that an AC OPF approach is best suited, to capture the inherent sensitivities of non-convex power flow solutions while also providing the means of deployment with 5G communication.

Insights were provided on possible grid code candidates and definition of possible new ancillary services to serve the futuristic grid. The initial goals for the validation of grid codes which were defined for SV_A and SV_B will be the subject of future deliverables in WP3. Initial implications of the new techniques on grid codes and ancillary services, ICT and sustainability were also brought to limelight. This WP will contribute towards the recommendation of new network codes and ancillary services which enable high penetration of RES in LV distribution grids.

5.1 Future work

The GNC based stability analysis will be extended to a 3-Node LV feeder case. The stability analysis will be done considering both grid connected scenario and islanded scenario. The results of this study are addressed in D3.2. An insight into the ZIP composition will be presented. Results from a formal comparative study will make a case for adaptation to a field trial in WP5. The initial network code goals defined in this deliverable will be validated and verified through field trials and simulations in the upcoming deliverables.

6. References

[1] R. D. Middlebrook, “Input filter considerations in design and application of switching regulators,” pp. 366–382, 1976.

[2] S. Kjaer, J. Pederson, and F. Blaabjerg, “A review of single-phase grid-connected inverters for photovoltaic modules,” *IEEE Trans. Ind. Appl.*, vol. 41, no. 5, pp. 1292–1306, 2005.

[3] B. Wang, W. Li, and Y. Zhao, “Design and Analysis of a Grid-Connected Photovoltaic Power System,” *IEEE Trans. Power Electron.*, vol. 25, no. 4, pp. 992–1000.

[4] S. Jain and V. Agarwal, “A Single-Stage Grid Connected Inverter Topology for Solar PV Systems With Maximum Power Point Tracking,” *IEEE Trans. Power Electron.*, vol. 22, no. 5, pp. 1928–1940, 2007.

[5] S.-K. Kim, J.-H. Jeon, C.-H. Cho, J.-B. Ahn, and S.-H. Kwon, “Dynamic Modeling and Control of a Grid-Connected Hybrid Generation System With Versatile Power Transfe,” *IEEE Trans. Ind. Electron.*, vol. 55, no. 4, pp. 1677–1688, 2008.

[6] R. Abebe *et al.*, “Integrated motor drives: state of the art and future trends,” *IET Electr. Power Appl.*, vol. 10, no. 8, pp. 757–771, 2016.

[7] B. . Patterson, “DC, come home: DC microgrids and the birth of the Enernet’’,” *IEEE Power Energy Mag*, vol. 10, no. 6, pp. 66–69, 2012.

[8] N. Sasidharan and J. . Singh, “A Novel Single-Stage Single-Phase Reconfigurable Inverter Topology for a Solar Powered Hybrid AC/DC Home,” *IEEE Trans. Ind. Electron.*, vol. 64, no. 4, pp. 2820–2828, 2017.

[9] A. Emadi, A. Khaligh, C. H. Rivetta, and G. A. Williamson, “Constant power loads and negative impedance instability in automotive systems: Definition modeling stability and control of power electronic converters and motor drives,” *IEEE Trans. Veh. Technol.*, vol. 55, no. 4, pp. 1112–1125, 2006.

[10] B. Wen, D. Boroyevich, P. Mattavelli, Z. Shen, and R. Burgos, “Influence of phase-locked loop on input admittance of three-phase voltage-source converters,” *Appl. Power Electron. Conf. Expo.*, vol. Twenty-Eig, 2013.

[11] L. Herrera, W. Zhang, and J. Wang, “Stability Analysis and Controller Design of DC Microgrids With Constant Power Loads,” *IEEE Trans. Smart Grid*, vol. 8, no. 2, pp. 881–888, 2017.

[12] B. Wen, D. Boroyevich, R. Burgos, P. Mattaveli, and Z. Shen, “Analysis of D-Q Small-Signal Impedance of Grid-Tied Inverters,” *IEEE Trans. Power Electron.*, vol. 31, no. 1, pp. 675–687, 2016.

[13] W. Cao, Y. Ma, L. Yang, F. Wang, and L. . Tolbert, ““D–Q Impedance Based Stability Analysis and Parameter Design of Three-Phase Inverter-Based AC Power Systems,” *IEEE Trans. Ind. Electron.*, vol. 64, no. 7, pp. 6017–6028, 2017.

[14] B. Wen, D. Boroyevich, R. Burgos, P. Mattaveli, and Z. Shen, “Small-Signal Stability Analysis of Three-Phase AC Systems in the Presence of Constant Power Loads Based on Measured d-q Frame Impedances,” *IEEE Trans. Power Electron.*, vol. 30, no. 10, pp. 5952–5963, 2015.

[15] G. Sulligoi, D. Bosich, G. Giadrossi, L. Zhu, M. Cupelli, and A. Monti, “Multiconverter Medium Voltage DC Power Systems on Ships: Constant-Power Loads Instability Solution Using Linearization via State Feedback Control,” vol. 5, no. 5, pp. 2543–2552, 2014.

[16] A. Riccobono and E. Santi, “Comprehensive Review of Stability Criteria for DC Power Distribution Systems,” *IEEE Trans. Ind. Appl.*, vol. 50, no. 5, pp. 3525–2535, 2014.

[17] C. M. Wildrick, F. C. Lee, B. H. Cho, and B. Choi, “A method of defining the load impedance specification for a stable distributed power system,” vol. 10, ., no. 3, pp. 280–285, 1995.

[18] S. D. Sudhoff, S. F. Glover, P. T. Lamm, D. H. Schmucker, and D. E. Delisle, “Admittance space stability analysis of power electronic systems,” vol. 36, no. 3, pp. 965–973, 2000.

[19] B. Wen, D. Boroyevich, R. Burgos, P. Mattaveli, and Z. Shen, “Inverse Nyquist Stability Criterion for Grid-Tied Inverters,” vol. 32, no. 2, pp. 1548–1556, 2017.

[20] A. Riccobono and E. Santi, “Stability analysis of an all-electric ship MVDC Power Distribution System using a novel Passivity-Based Stability Criterion,” pp. 411–419, 2013.

[21] J. Sun, “Impedance-Based Stability Criterion for Grid-Connected Inverters,” *IEEE Trans. Power Electron.*, vol. 26, no. 11, pp. 3075–3078, 2011.

[22] M. Stojic and D. Siljak, “Generalization of Hurwitz, Nyquist and Mikhailov stability criteria,” vol. 10, no. 3, pp. 250–254, 1965.

[23] D. Siljak, “A note on the generalized Nyquist criterion,” vol. 11, no. 2, p. 317, 1966.

[24] C. Desoer and Y.-T. Wang, “On the generalized nyquist stability criterion,” vol. 25, no. 2, pp. 187–196, 1980.

[25] A. G. J. MacFarlane and I. Postlethwaite, “The generalized Nyquist stability criterion and

multivariable root loci," vol. 25, pp. 81–127, 1977.
[26] X. Wang, F. Blaabjerg, and P. C. Loh, "Passivity-Based Stability Analysis and Damping Injection for Multiparalleled VSCs with LCL Filters," vol. 32, no. 11, pp. 8922–8935, 2017.
[27] Z. Liu, J. Liu, X. Hou, Q. Dou, D. Xue, and T. Liu, "Output Impedance Modeling and Stability Prediction of Three-Phase Paralleled Inverters With Master–Slave Sharing Scheme Based on Terminal Characteristics of Individual Inverters," vol. 31, no. 7, pp. 5306–5320, 2016.
[28] C. Yoon, H. Bai, R. N. Beres, X. Wang, C. L. Bak, and F. Blabjerg, "Harmonic Stability Assessment for Multiparalleled, Grid-Connected Inverters," vol. 7, no. 4, pp. 1388–1397, 2016.
[29] Z. Wang, X. Wang, Z. Chen, and F. Blaabjergq, "Small-Signal Stability Analysis of Inverter-Fed Power Systems Using Component Connection Method," vol. PP, no. 99, 2017.
[30] K. J. Lippert and T. A. Domitrovich, "AFCIs—From a Standards Perspective," vol. 50, no. 2, pp. 1478–1482, 2014.
[31] W. S. Moon, J. C. Kim, A. Jo, S. B. Bang, and W. S. Koh, "Ignition Characteristics of Residential Series Arc Faults in 220-V HIV Wires," vol. 51, no. 3, pp. 2054–2059, 2015.
[32] ESB, "Distribution Code v5.0." https://www.esbnetworks.ie/docs/default-source/publications/distribution-code-v5-0.pdf?sfvrsn=6, Apr-.
[33] EN50160, "Voltage characteristics of electricity supplied by public distribution systems." 1999.
[34] M. Dietmannsberger and D. Schulz, "Impacts of Low-Voltage Distribution Grid Codes on Ancillary Services and Anti-Islanding Detection of Inverter-Based Generation," *IEEE Trans. ENERGY Convers.*, vol. 41, no. 4, pp. 1287–1294, 2016.
[35] B. I. Craciun, T. Kerekes, and D. Sera, "Overview of recent Grid Codes for PV power integration," pp. 959–965, 2012.
[36] E. Demirok, P. C. González, K. H. B. Frederiksen, D. Sera, P. Rodriguez, and R. Teodorescu, "Local Reactive Power Control Methods for Overvoltage Prevention of Distributed Solar Inverters in Low-Voltage Grids," *IEEE J. Photovoltaics*, vol. 1, no. 2, pp. 174–182, Oct. 2011.
[37] Entsoe, "UCTE Report," 2006.
[38] H. L. Willis, *Power distribution planning reference book*. CRC press, 2004.
[39] K. Clark and N. Miller, "WindFREE reactive power control for windturbine generators," in *Nordic Wind Power Conference, Espoo, Finland*, 2006.
[40] R. C. Dugan and T. E. McDermott, "Operating conflicts for distributed generation on distribution systems," in *Rural Electric Power Conference, 2001*, 2001, p. A3/1-A3/6.
[41] C. L. Masters, "Voltage rise: the big issue when connecting embedded generation to long 11 kV overhead lines," *Power Eng. J.*, vol. 16, no. 1, pp. 5–12, 2002.
[42] P. Richardson, D. Flynn, and A. Keane, "Local Versus Centralized Charging Strategies for Electric Vehicles in Low Voltage Distribution Systems," *IEEE Trans. Smart Grid*, vol. 3, no. 2, pp. 1020–1028, 2012.
[43] ABB, "XLPE Land Cable Systems; User's Guide," 2010.
[44] T. Sansawatt, L. F. Ochoa, and G. P. Harrison, "Smart Decentralized Control of DG for Voltage and Thermal Constraint Management," *IEEE Trans. Power Syst.*, vol. 27, no. 3, pp. 1637–1645, 2012.
[45] C. Murphy and A. Keane, "Optimisation of wind farm reactive power for congestion management," in *IEEE PowerTech, 2013 Grenoble*, 2013, pp. 1–6.
[46] C. Murphy and A. Keane, "Optimised Voltage Control for Distributed Generation," in *PowerTech, 2015 IEEE Eindhoven*, 2015, pp. 1–6.
[47] F. Qiu and J. Wang, "Distributionally Robust Congestion Management With Dynamic Line Ratings," *IEEE Trans. Power Syst.*, vol. 30, no. 4, pp. 2198–2199, Jul. 2015.
[48] D. J. Burke and M. J. O'Malley, "Factors Influencing Wind Energy Curtailment," *IEEE Trans. Sustain. Energy*, vol. 2, no. 2, pp. 185–193, 2010.
[49] S. Gill, I. Kockar, and G. W. Ault, "Dynamic Optimal Power Flow for Active Distribution Networks," *IEEE Trans. Power Syst.*, vol. 29, no. 1, pp. 121–131, Jan. 2014.
[50] R. Majumder, "Aspect of voltage stability and reactive power support in active distribution," *IET Gener. Transm. Distrib.*, vol. 8, no. 3, pp. 442–450, Mar. 2014.
[51] J. Zhao, X. Liu, C. Lin, and W. Wei, "Three-phase unbalanced voltage/VAR optimization for active distribution networks," in *2016 IEEE Power and Energy Society General Meeting (PESGM)*, 2016.
[52] J. Carpienter, "Contribution e l'étude do Dispatching Economique," *Bull. Soc. Française Electr.*, vol. 3, 1962.
[53] H. W. Dommel and W. F. Tinney, "Optimal Power Flow Solutions," *IEEE Trans. Power*

App. Syst., vol. PAS-87, no. 10, pp. 1866–1876, 1968.

[54] C. M. Shen and M. A. Laughton, “Determination of optimum power-system operating conditions under constraints,” *Proc. Inst. Electr. Eng.*, vol. 116, no. 2, pp. 225–239, 1969.

[55] M. Huneault and F. D. Galiana, “A survey of the optimal power flow literature,” *IEEE Trans. Power Syst.*, vol. 6, no. 2, pp. 762–770, 1991.

[56] A. J. Wood and B. F. Wollenberg, *Power Generation, Operation, and Control*. J. Wiley & Sons, 1996.

[57] M. E. Baran and F. F. Wu, “Optimal capacitor placement on radial distribution systems,” *IEEE Trans. Power Del.*, vol. 4, no. 1, pp. 725–734, Jan. 1989.

[58] N. S. Rau and Y.-H. Wan, “Optimum location of resources in distributed planning,” *IEEE Trans. Power Syst.*, vol. 9, no. 4, pp. 2014–2020, Nov. 1994.

[59] G. P. Harrison and A. R. Wallace, “Optimal power flow evaluation of distribution network capacity for the connection of distributed generation,” *IEE Proc. Gener. Transm. Distrib.*, vol. 152, no. 1, pp. 115–122, 2005.

[60] L. F. Ochoa and G. P. Harrison, “Minimizing Energy Losses: Optimal Accommodation and Smart Operation of Renewable Distributed Generation,” *IEEE Trans. Power Syst.*, vol. 26, no. 1, pp. 198–205, 2011.

[61] L. F. Ochoa, A. Keane, and G. P. Harrison, “Minimizing the Reactive Support for Distributed Generation: Enhanced Passive Operation and Smart Distribution Networks,” *IEEE Trans. Power Syst.*, vol. 26, no. 4, pp. 2134–2142, 2011.

[62] S. C. E. Jupe and P. C. Taylor, “Distributed generation output control for network power flow management,” *IET Renew. Power Gener.*, vol. 3, no. 4, pp. 371–386, Dec. 2009.

[63] A. Keane, E. Diskin, P. Cuffe, D. Brooks, T. Hearne, and T. Fallon, “Reactive power support from distributed generation - Ireland’s demonstration initiative,” in *IEEE Power and Energy Society General Meeting, 2012*, 2012, pp. 1–5.

[64] M. Dzamarija and A. Keane, “Firm and Non-Firm Wind Generation Planning Considering Distribution Network Sterilization,” *IEEE Trans. Smart Grid*, vol. 4, no. 4, pp. 2162–2173, 2013.

[65] A. Keane *et al.*, “State-of-the-Art Techniques and Challenges Ahead for Distributed Generation Planning and Optimization,” *IEEE Trans. Power Syst.*, vol. 28, no. 2, pp. 1493–1502, 2013.

[66] A. C. Rueda-Medina and A. Padilha-Feltrin, “Distributed Generators as Providers of Reactive Power Support- A Market Approach,” *IEEE Trans. Power Syst.*, vol. 28, no. 1, pp. 490–502, 2013.

[67] C. Murphy, A. Soroudi, and A. Keane, “Information Gap Decision Theory-Based Congestion and Voltage Management in the Presence of Uncertain Wind Power,” *IEEE Trans. Sustain. Energy*, vol. 7, no. 2, pp. 841–849, Apr. 2016.

[68] J. Quirós-Tortós, L. F. Ochoa, S. W. Alnaser, and T. Butler, “Control of EV Charging Points for Thermal and Voltage Management of LV Networks,” *IEEE Trans. Power Syst.*, vol. 31, no. 4, pp. 3028–3039, Jul. 2016.

[69] A. O’Connell, D. Flynn, and A. Keane, “Rolling Multi-Period Optimization to Control Electric Vehicle Charging in Distribution Networks,” *IEEE Trans. Power Syst.*, vol. 29, no. 1, pp. 340–348, Jan. 2014.

[70] J. Robertson, G. Harrison, and A. R. Wallace, “OPF Techniques for Real-Time Active Management of Distribution Networks,” *IEEE Trans. Power Syst.*, vol. PP, no. 99, p. 1, 2016.

[71] B. Zhang, A. Y. S. Lam, A. D. Dom’\inguez-Garc’\ia, and D. Tse, “An optimal and distributed method for voltage regulation in power distribution systems,” *IEEE Trans. Power Syst.*, vol. 30, no. 4, pp. 1714–1726, 2015.

[72] D. Ranamuka, A. P. Agalgaonkar, and K. M. Muttaqi, “Online Coordinated Voltage Control in Distribution Systems Subjected to Structural Changes and DG Availability,” *IEEE Trans. Smart Grid*, vol. 7, no. 2, pp. 580–591, Mar. 2016.

[73] M. Brenna *et al.*, “Automatic Distributed Voltage Control Algorithm in Smart Grids Applications,” *IEEE Trans. Smart Grid*, vol. 4, no. 2, pp. 877–885, Jun. 2013.

[74] P. Cuffe, P. Smith, and A. Keane, “Capability chart for distributed reactive power resources,” *IEEE Trans. Power Syst.*, vol. 29, no. 1, pp. 15–22, 2014.

[75] M. J. E. Alam, K. M. Muttaqi, and D. Sutanto, “Community Energy Storage for Neutral Voltage Rise Mitigation in Four-Wire Multigrounded LV Feeders With Unbalanced Solar PV Allocation,” *IEEE Trans. Smart Grid*, vol. 6, no. 6, pp. 2845–2855, Nov. 2015.

[76] R. Kabiri, D. G. Holmes, B. P. McGrath, and L. G. Meegahapola, “LV Grid Voltage Regulation Using Transformer Electronic Tap Changing, With PV Inverter Reactive Power Injection,” *IEEE J. Emerg. Sel. Top. Power Electron.*, vol. 3, no. 4, pp. 1182–1192, Dec.

2015.
[77] A. O'Connell and A. Keane, "Volt-var curves for photovoltaic inverters in distribution systems," *IET Gener. Transm. Distrib.*, vol. 11, no. 3, pp. 730–739, 2017.
[78] F. Olivier, P. Aristidou, D. Ernst, and T. Van Cutsem, "Active Management of Low-Voltage Networks for Mitigating Overvoltages Due to Photovoltaic Units," *IEEE Trans. Smart Grid*, vol. 7, no. 2, pp. 926–936, Mar. 2016.
[79] A. J. Collin, G. Tsagarakis, A. E. Kiprakis, and S. McLaughlin, "Development of Low-Voltage Load Models for the Residential Load Sector," *IEEE Trans. Power Syst.*, vol. 29, no. 5, pp. 2180–2188, Sep. 2014.
[80] G. Tsagarakis, A. J. Collin, A. E. Kiprakis, and S. McLaughlin, "Voltage control of UK residential customers for power reduction," in *2013 IEEE Grenoble Conference*, 2013, pp. 1–6.
[81] K. McKenna and A. Keane, "Residential Load Modeling of Price-Based Demand Response for Network Impact Studies," *IEEE Trans. Smart Grid*, vol. 7, no. 5, pp. 2285–2294, Sep. 2016.
[82] K. McKenna and A. Keane, "Open and Closed-Loop Residential Load Models for Assessment of Conservation Voltage Reduction," *IEEE Trans. Power Syst.*, vol. PP, no. 99, 2016.
[83] A. O'Connell, "Unbalanced distribution system voltage optimisation," in *PES Innovative Smart Grid Technologies Conference Europe (ISGT-Europe), 2016 IEEE*, 2016, pp. 1–6.
[84] M. Bakhtvar and A. Keane, "A study of operation strategy of small scale heat storage devices in residential distribution feeders," in *PES Innovative Smart Grid Technologies Conference Europe (ISGT-Europe), 2017 IEEE*, 2017, pp. 1–6.
[85] Pyomo, "What is Pyomo?" 2017.
[86] M. Lutz, *Learning Python*. O'Reilly, 2003.
[87] D. R. R. Penido, L. R. de Araujo, S. Carneiro, J. L. R. Pereira, and P. A. N. Garcia, "Three-Phase Power Flow Based on Four-Conductor Current Injection Method for Unbalanced Distribution Networks," *IEEE Trans. Power Syst.*, vol. 23, no. 2, pp. 494–503, May 2008.
[88] A. O'Connell and A. Keane, "Multi-period three-phase unbalanced optimal power flow," in *Innovative Smart Grid Technologies Conference Europe (ISGT-Europe), 2014 IEEE PES*, 2014, pp. 1–6.

7. List of Abbreviations

AC	Alternating Current
ADMD	After Diversity Maximum Demand
AFCI	Arc Fault Circuit Interrupter
ASHP	Air-Source Heat-Pump
AVM	Active Voltage Management
B2B	Business to Business
BMS	Building management system
BST	Battery Storage Technology
CAPEX	CAPital Expenditure
CCM	Component Connection Method
CENELEC	European Committee for Electro technical Standardization
CEP	Complex Event Processing
COTS	Commercial off-the-shelf
CPMS	Charge Point Management System
CPL	Constant Power Load
CPS	Constant Power Source
CSA	Cloud Security Alliance
EMS	Decentralised energy management system
DC	Direct Current
DER	Distributed Energy Resources
DG	Distributed Generator
DMS	Distribution Management System
DMTF	Distributed Management Taskforce
DSE	Domain Specific Enabler
DVSM	Dynamic Voltage Stability Monitoring
EAC	Exploitation Activities Coordinator
ERP	Enterprise Resource Planning
ESB	Electricity Supply Board
ESAC	Energy Source Analysis Consortium
ESCO	Energy Service Companies
ESO	European Standardisation Organisations
ETP	European Technology Platform
ETSI	European Telecommunications Standards Institute
EV	Electric Vehicle
GE	Generic Enabler
GM	Gain Margin
GMPM	Gain Margin Phase Margin
GNC	Generalised Nyquist Criterion
HEMS	Home Energy Management System
HV	High Voltage
I2ND	Interfaces to the Network and Devices
ICT	Information and Communication Technology
IEC	International Electro-technical Commission
IGDT	Information Gap Decision Theory
IoT	Internet of Things
KPI	Key Performance Indicator
LRC	Line Regulated Converter
LV	Low Voltage
LVAC	Low Voltage AC
MIMO	Multiple Input Multiple Output
MLG	Minor Loop Gain
M2M	Machine to Machine
MPLS	Multiprotocol Label Switching
MPP	Maximum Power Tracking
MV	Medium Voltage
NIST	National Institute of Standards and Technology
O&M	Operations and maintenance
OLTC	On Load Tap Changer
OPEX	OPerational Expenditure
OPF	Optimal Power Flow

PBSC	Passivity Based Stability Criterion
PCC	Point of Common Coupling
PLL	Phase Locked Loop
PM	Phase Margin
PMT	Project Management Team
POL	Point of Load
PPP	Public Private Partnership
PRBS	Pseudo Random Binary Sequence
PV	Photovoltaic
QEG	Quality Evaluation Group
RES	Renewable Energy System
RHP	Right Half Plane
RMS	Root Mean Square
S3C	Service Capacity; Capability; Connectivity
SCADA	Supervisory Control and Data Acquisition
SDH	Synchronous Digital Hierarchy
SDN	Software Defined Networks
SDOs	Standards Development Organisations
SET	Strategic Energy Technology
SET	Strategic Energy Technology
SG-CG	Smart Grid Coordination Group
SGSG	Smart Grid Stakeholders Group
SME	Small & Medium Enterprise
SoA	State of the Art
SON	Self Organizing Network
SRF	Synchronous Reference Frame
SS	Secondary Substation
SSAU	Secondary Substation Automation Unit
TL	Task Leader
TM	Technical Manager
UL	Underwriters Laboratories
VOI	Virtual Output Impedance
VPP	Virtual Power Plant
WP	Work Package
WPL	Work Package Leader
WSI	Wideband System Identification
ZIP	*constant impedance Z*, *constant current I*, *and constant power P*

8. List of Figures

Figure 1 Relations between Deliverables in WP3 and other work packages 8
Figure 2 Classical power system structure 9
Figure 3 Modern scenario with PV penetration 10
Figure 4 Futuristic power system structure 10
Figure 5 Equivalent impedance model 11
Figure 6 Stability criterion for DC systems [16], [19] 12
Figure 7 Closed loop control system formed by source-load impedances 12
Figure 8 PBSC stability analysis [16] 13
Figure 9 Representation of *dq* coordinate system 14
Figure 10 Three-phase unbalanced network topology with RES connection 17
Figure 11 Offline Modelling Phase and Online Deployment Phase of AVM 24
Figure 12 3-OPF modular design 25
Figure 13 Example droop slope shown with upper and lower voltage and reactive power bounds 26
Figure 14 Grid voltage: *abc* to *dq* transformation 41

Annex

How the Clarke and Park transformation converts a 3 phase voltage signal to the apparent DC quantity in the synchronous reference frame is demonstrated. The d axis is aligned with the grid voltage, hence we can see that the q component of voltage is zero. Furthermore, since a voltage invariant transformation is applied, the d axis voltage value exactly matches with the peak value of three phase *abc* waveform and also the 2 phase *αβ* waveform. Hence the name 'Amplitude Invariant'.

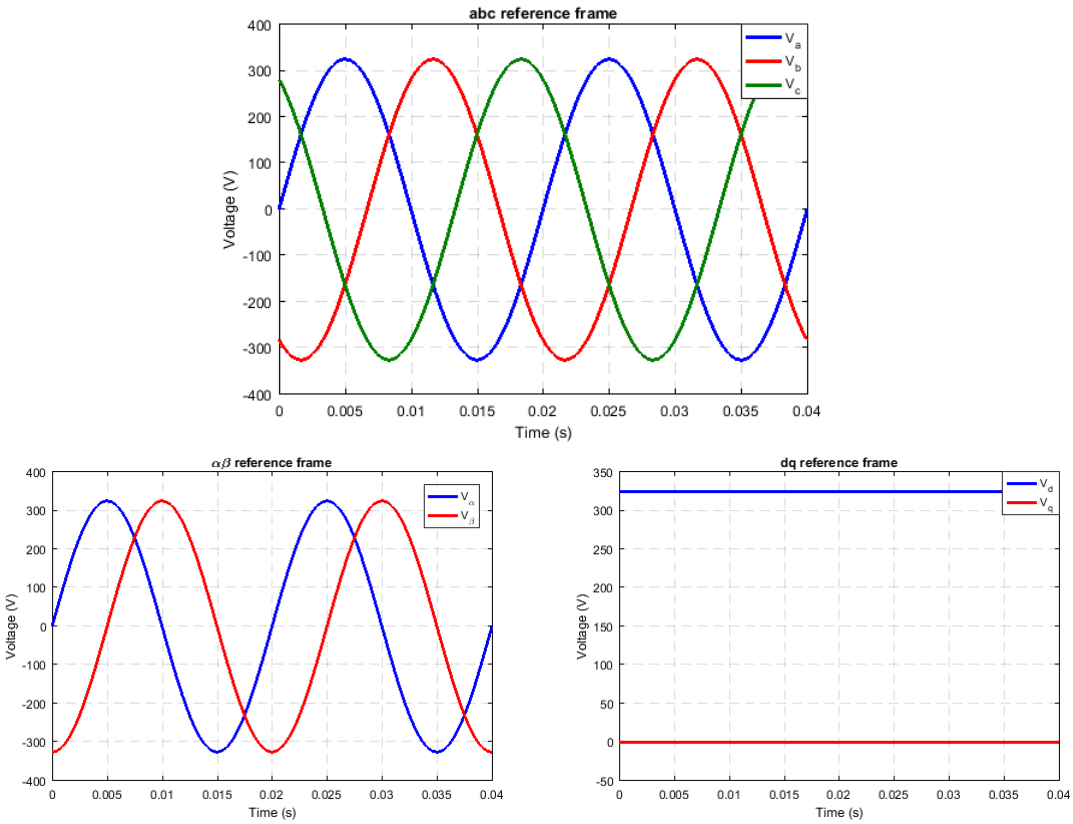

Figure 14 Grid voltage: *abc* to *dq* transformation