RESERVE

D5.1 v1.0

Report on field trial of voltage control concepts in Ireland and validation of initial network codes and ancillary service definitions

The research leading to these results has received funding from the European Union's Horizon 2020 Research and Innovation Programme, under Grant Agreement no 727481.

Project Name	RESERVE
Contractual Delivery Date:	30.09.2017
Actual Delivery Date:	30.09.2017
Contributors:	Sriram Gurumurthy (RWTH), Markus Mirz (RWTH), Jonathan Sandham (ESB), Sean Walsh (ESB), Ronan Murphy (ESB), Conor Murphy (UCD), Andrew Keane (UCD), David Ryan (WIT), Miguel Ponce de Leon (WIT), Artur Löwen (GH), Dan Preotescu (CRE), Lucian Toma (UPB), Tao Huang (POLITO), Ettore Bompard (POLITO)
Workpackage:	WP5 – Field trial of voltage control concepts
Security:	PU
Nature:	R
Version:	1.0
Total number of pages:	36

Abstract

This document focuses on planned implementation of the RESERVE field trials at three trial sites as well as in the laboratory at RWTH in Aachen, Germany. The field trial sites will perform different tests designed to test the implementation of voltage/frequency management solutions under a range of conditions. The laboratory configuration at RWTH will integrate all RESERVE Components as they become available and will perform tests on the entire solution. This document also describes contribution of the RWTH laboratory to the tests performed at the remote trial sites. Finally, the initial concept of Voltage and Frequency control solutions are presented.

Keyword list

Integrated Grid, Smart Grid, field testing, laboratory testing, cyber-attack, scalability, cyber-physical simulation

Executive Summary

The document describes the planned activities, to be performed at each trial site and in the laboratory tests. The trial sites are located in Ireland, Romania and in Germany. Each trial site will complete a particular set of tests (called use cases) in order to evaluate specific features of the developing RESERVE Solution. The description of each trial site includes the trial architecture design, the components used at the site, as well as, the description of the actions that the RESERVE components need to execute. For each planned use case, the analysis and validation of voltage control and frequency control are performed, corresponding to the real issues observed in real time and historically on the Electrical Grids of Ireland and Romania identified during the development of RESERVE.

The Irish trial site will perform the use case on voltage control. The Romanian trial site will simulate the use case on frequency control based on models developed of the Romanian Transmission system. The German trials involve development and validation testing of hardware in the areas of voltage and frequency control using hardware in the loop..

The RWTH laboratory hosts all of the innovative components developed in RESERVE, including the functionalities of innovative 5G mobile technology, which is one of the important components in the RESERVE solution. Therefore, the RWTH laboratory will be remotely connected to the trial sites so that it can contribute to the use cases performed at the trial sites. Moreover, the laboratory tests will fulfill the assessment of the scalability of the developing system.

The results of the tests (the use cases described in this document) from the trial sites will be provided in later documents.

Authors

Partner	Name	e-mail
RWTH		
	Sriram Gurumurthy	sgurumurthy@eonerc.rwth-aachen.de
	Markus Mirz	Mmirz@eonerc.rwth-aachen.de
ESB		
	Jonathan Sandham	jonathan.sandham@esb.ie
	Sean Walsh	sean.walsh2@esb.ie
	Ronan Murphy	ronan.murphy@esb.ie
UCD		
	Conor Murphy	cmurphy5@ucd.ie
	Andrew Keane	andrew.keane@ucd.ie
WIT		
	David Ryan	dryan@tssg.org
	Miguel Ponce de Leon	miguelpdl@tssg.org
GH		
	Artur Löwen	aloewen@gridhound.de
CRE		
	Dan Preotescu	dan.preotescu@crenerg.org
UPB		
	Lucian Toma	lucian.toma@upb.ro
POLITO		
	Tao Huang	tao.huang@polito.it
	Ettore Bompard	ettore.bompard@polito.it

Table of Contents

1. Introduction

1.1 Scope of the Deliverable

The document D5.1 is the first deliverable of WP5 of the RESERVE project and is the first deliverable providing information about trial sites. It mainly contains information regarding the three trial sites in Ireland, as well as information about the laboratory trial site at RWTH. Most of the trials will be executed at the later stages of the project i.e. after delivery of this document in September 2017 (M12).

Moreover, the document includes information about initial methodology to be used for the assessment of the RESERVE Solutions for voltage and frequency control, which will be performed at the later stage of the system development. The results will be described in a subsequent document.

1.2 How to read this Document

Before reading this document, the reader should read the document D1.1 which motivates the RESERVE project, describes the architecture of the RESERVE system and describes the RESERVE proposition, which instantiates the various architectures. We will avoid repeating detailed descriptions, which may be found in D1.1 and D1.4.

The following sections describe the key components which are the key input for this document and are described in detail in other documents. Other important input documents, which influence development of the trial sites, describe identification and analysis of the potential for shortcomings in Networks codes in the proposed TSO/DSO grid codes within Europe.

1.2.1 Network Codes and Ancillary Services - (Valuation of the Network Codes to see if there are any short comings with respect to the trials proposed)

This chapter of the deliverable D5.1 deals with the network codes and ancillary services for the Project RESERVE. At present, one proposal from WP3 is to implement and evaluate the ability of the Middlebrook theory to successfully manage voltage in LV systems. Currently, on a distribution network with increasing percentages of RES penetration, DSOs either need to use on-load-tap changing (OLTC) transformers to stabilise voltage or introduce inverters as described in this report. While OLTC might provide a short to medium term solution, we endeavour in RESERVE to stabilise voltage without using neighbouring networks. Such networks may or may not have sufficient control capability to provide stabilisation support, in particular due to the volatility of power generation in high RES scenarios. These factors have led to use cases where balancing is delivered by inverters.

The input for this Chapter is a consolidation of work done in D3.1 on impact of network codes and ancillary services.

1.2.2 Network codes pertaining to various DSOs in EU

One of the goals of RESERVE project is to appreciate the potential for harmonised network codes and new ancillary services. The distribution network code of ESB is considered mainly given that the field trials are going to take place at the Irish trial grid [1]. We bring the standard DPC4.2 to focus which complies with the EN 50160 standard approved by CENELEC [2]. A 10% voltage fluctuation is allowed in this system. DCC6.8.3 provides information on voltage flicker and harmonic distortion at each harmonic. Since the methodology of impedance identification in the project RESERVE involves the injection of pseudo random binary sequence (PRBS) signal into the inverter controller, the inverter injects this noise into the grid for a brief time frame. While performing trials at RWTH laboratory and field trials in Irish grid, the harmonic distortion should be computed to observe if it satisfies the present standards (DCC6.8.3 [1]). In case of minor deviations from the current standard, minor modifications in the grid codes that are required will be identified after the delivery of the trials.

In addition, the power factor for Irish distribution grid must be strictly between 0.90 to 1 (DCC6.9.1 [1]); the system is expected to be inductive where reactive power is only absorbed. This condition needs to be relaxed for the envisioned futuristic grid. The new LV grid code VDE-AR-N 4105 in Germany is formulated to support the penetration of PV [3]–[5]. The power factor

in German LV grid according to this standard can vary between 0.90 lagging (inductive) to 0.90 (leading) based on the active power change [3]. This will enable the PV inverter to either absorb reactive power (when voltage is higher than nominal) and inject reactive power (when voltage is lower than nominal). Additionally, under this paradigm, the local inverters provide an ancillary service known as fault ride through (FRT), where the inverter injects reactive power under fault condition to stabilise the grid voltage [3], [5].

1.3 A potential network code for future grids

Through the results obtained in T3.1, an initial glimpse on how phase margin or gain margin could be standardised is obtained. By the completion of the task T3.3, it would be clear to specify the minimum amount of margin that the system must possess. Based on this minimum margin, the algorithm implemented in SSAU would communicate with the inverters for impedance manipulations to maintain margins.

1.4 Impact on Ancillary Services

Ancillary services are services or equipment which help in autonomous functioning of the power system such as frequency and voltage regulation. With the definition of stability analysis and control based on VOI intrigues the requirement on ICT infrastructure and other ancillary services. The WBSI tool which is required to measure the grid and inverter impedance is an important ancillary service present at the customer end. Similarly, the VOI is an ancillary service which is local to the inverter. Moreover, the inverters themselves are ancillary services since they take part in stabilising the grid under crisis situations.

1.5 Summary

An evaluation of network codes and ancillary services are provided from the voltage scenario perspective. The possible influences of the Sv_A on the grid voltage is mentioned. More information regarding the impact of voltage scenario use cases on the current network codes can be understood through further simulations and lab trials. One of the results of T3.1 suggests that the phase margin and gain margin obtained from stability analysis through Nyquist plots could be a possible futuristic grid code. These results will be presented in D3.2. Specifying strict minimums on the margins will always enable stable operation of the grid.

2. Trials

An overview of the trials is presented below, giving the background to the trial sites. The description includes the architecture of the trial sites with some basic technical details. The trial site planning also introduces the descriptions of the use cases i.e. the actions that will be performed at the sites, emulating particular Network scenarios, thus proving the RESERVE concepts.

2.1 RWTH Inverter Trial (Germany) – Voltage Output Impedance (RWTH)

The goals of this trial are to verify the output impedance identification of the Wide Band System Identification (WBSI) tool and the working of virtual output impedance (VOI) controller. The trials at the ACS-RWTH laboratory is planned in three stages:

1. Performed trials with Hardware in the Loop (HiL), where the plant (the grid connected inverter) is the software component which is controlled by an actual digital controller.
2. A similar test is applied on an actual inverter developed at the ACS-RWTH laboratory. This set-up is large and not suitable for transportation for the Irish field trial hence a customised and compact new inverter is currently being outsourced.
3. With the new inverter, highlighted above, we repeat the same test and additionally, a Power Hardware in the Loop (PHiL) simulation is planned

The following sections explain the above three stages. The first section will explain the HiL simulation followed by the second where the hardware component (the inverter) is included. Then the last section will cover the PHiL setup with the new inverter. These simulations are related to Sv_A. These trials will be performed at the ACS-RWTH laboratory.

2.1.1 HiL Simulation with LabVIEW and OPAL-RT

The goal of this set up is to verify whether the analytical impedances obtained using mathematical modelling are coherent with the results using the (WBSI) tool. The power stages are modelled into the OPAL-RT environment and the WBSI tool contains the impedance calculation algorithm as shown in Figure 2.1.

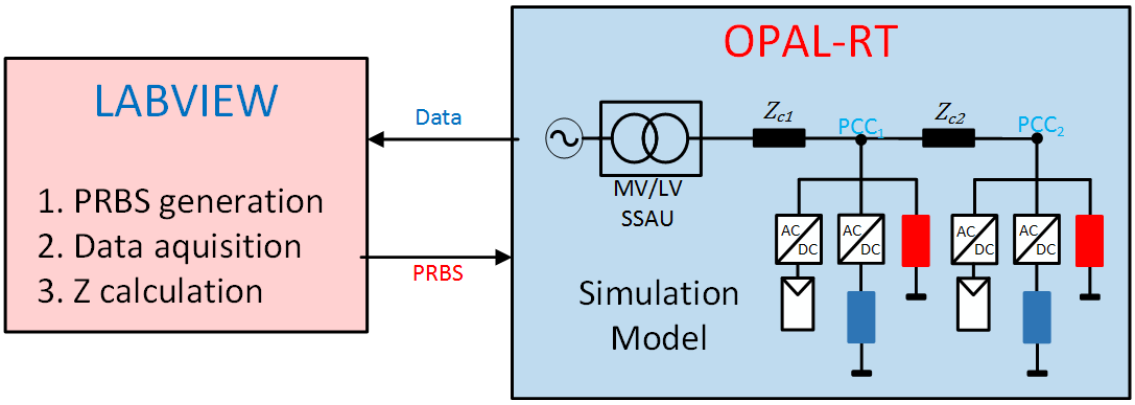

Figure 2.1: HiL Setup with LabVIEW and OPAL-RT

2.1.1.1 Description of LabVIEW environment

The PRBS generator, data acquisition and impedance calculation routines are implemented in LabVIEW. The multi-threaded architecture of Virtex-5 programmable FPGA of the NI PCIe-7841R RIO enables the parallel operation of PRBS injection and data acquisition. The high-performance DAC and ADC for the outgoing and incoming data conversion aids the process. The impedance calculation and complex curve fitting is also a computationally complex process which is performed with ease using this hardware.

The inputs to this simulation environment are voltage and current measurement data. The output is the PRBS signal.

2.1.1.2 Description of OPAL-RT environment

The RT-Lab environment of OPAL-RT system provides the link to MATLAB Simulink. This allows detailed switched models of inverters and grid connected inverters built in MATLAB Simulink to be transferred to the RT-LAB environment, where the complex system can be simulated in a real-time manner with feasibility of real time multiple inputs and outputs. The eMEGAsim open real-time software component of the RT-Lab runs on the OP5600 hardware, which consists of two six core Intel CPUs and a Xilinx Virtex 6 FPGA board. This advanced feature allows complex simulations to be run on real time.

This allows the distribution grid model with inverters and active rectifiers from MATLAB Simulink to be loaded into RT-LAB for real time simulations. The input to this simulation from the external world is the PRBS signal and the output is the voltage and current values.

2.1.1.3 Methodology

The Pseudo Random Binary Sequence (PRBS) signal can be injected on command using a virtual PC. In parallel, the data acquisition also happens. The data is that of voltage and current measurements at the output terminals of the inverter model. The time window of PRBS injection, the amplitude of noise and some additional parameters related to PRBS generation algorithm can be varied.

This trial will be prepared during the months of September and October.

2.1.2 Trial with FlePS converter and LabVIEW

The FlePS (Flexible Power Simulator) is mainly used as a power amplifier for PHiL applications. However, the inverter bridge in the FlePS can be used for preliminary testing. A proposed preliminary trial is to connect the Inverter bridge with a passive load of known values. This allows us to analytically model the load. WBSI tool in LabVIEW would allow us to inject PRBS into the FlePS inverter and measure its output impedance. Verification of the analytical formulation and measured impedance will allow the theory to be tested for complex loads and grid level scenario. The case involving a grid is planned to be done in a PHiL manner which is covered in the next section.

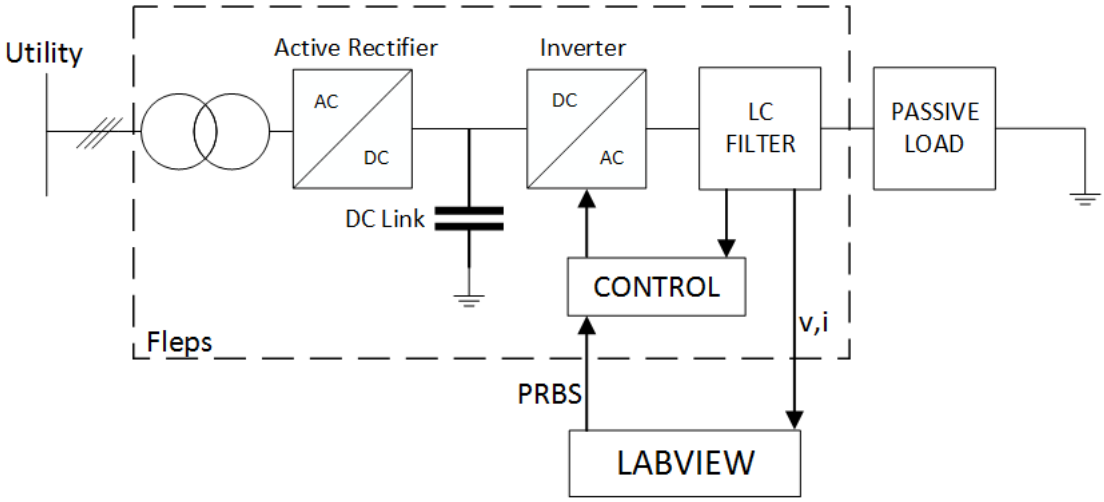

Figure 2.2: Single Line Diagram diagram of the LabVIEW controlled inverter based system.

2.1.2.1 FlePS description

The FlePS consists of a three phase isolating transformer with an active front end, a 4 leg inverter and a three phase decoupling filter The FlePS provides an option of having either an LC output filter or an LCL filter by configuring through software. The control hardware consists of two DSPs and one FPGA and it consists of 12 analog inputs for acquiring voltage and current measurements and reference from digital simulator. Digital PWM pins are available for controlling the switches in FlePS. The PRBS signal from LabVIEW is an input to the FlePS converter.

2.1.2.2 Methodology

The Pseudo Random Binary Sequence (PRBS) signal can be injected on command using a virtual PC. In parallel, the data acquisition takes place. A dedicated measurement port might be required to meet the bandwidth criteria for enabling impedance measurements up to high frequency range. In the following months, this analysis will be completed and when required, new measuring device would be in installed. By performing the impedance calculation, the grid impedance or output impedance of the inverter can be determined. Since in this case, the grid impedance is given by a simple passive load, the analytical expression is known. Hence verification of impedance identification will be conclusive when repeated for many different passive load values.

This trial will be prepared during the months of October, November and December 2017.

2.1.3 HiL and PHiL trial with new inverter

2.1.3.1 HiL Test

The same HiL test from the previous case is repeated with the new inverter to see if the impedance measurement is coherent as before. This will ensure that the WBSI tool implemented in the inverter hardware is working as expected. These trials form the basis for field trials with the Irish test grid.

This trial will be prepared during the months January to March, 2018.

2.1.3.2 Power hardware in the loop simulation

This trial can be possibly done if the hardware does not impose strict limitations. The FlePS converter will be used as a power amplifier between the grid model in RTDS environment (software) and the physical power inverter hardware. The RTDS solves for the network and determines the current supplied by the inverter output. This output goes to the FlePS and the FlePS uses its control algorithm to adjust its current.

2.2 Irish Field Trials (WIT/UCD/ESB)

The objective of Task 5.2 is to provide a platform to enable the validation of the voltage control research concepts against the network codes and ancillary services defined in WP3. This task will also entail the implementation of the software utilities build in WP4 as a mechanism to provide an optimised communications infrastructure that will transport readings and control messages between the relevant components. The relevant components, from a high level perspective, are comprised of a physical test site, a data aggregation component, the voltage control research utilities, the communications infrastructure and the network codes and ancillary services. The diagram below contains a high level representation of how the system is constructed from a system architecture perspective.

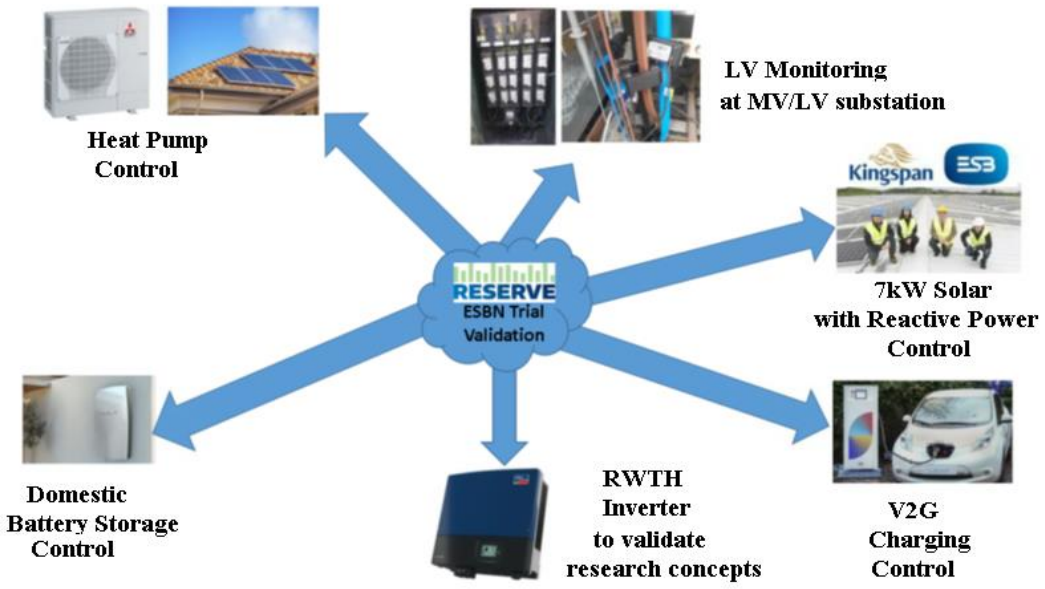

Figure 2.3: Integration of various technologies into the RESERVE project.

The main aggregation platform in use for the trials is a platform called SERVO and can be noted in Figure 2.3, the role of SERVO in the context of the operation of the test bed is a crucial one. It will perform the tasks of interfacing with each individual test site for the purpose of accessing readings, validating those readings against a Common Information Model (CIM) representation of the test site entity, providing access to the readings for the voltage control concepts for the and forwarding of the control messages, where appropriate, to the relevant test site component. In conjunction with SERVO providing a data transfer and data normalisation functionality it will also provide a policy based validation modelled on the Network Codes and the Ancillary Services that will examine the control messages generated by the voltage stability research concepts for potential Network Code violations.

Key to the success of the field trials is the effective interfacing with each test site from a communications perspective. It is envisaged that each test site will have an inverter and that inverter will have some communications technology. This will be achieved using a combination of hardware and software components and the technologies used to communicate with each test site will differ due to the capabilities the inverters at each test site. The software components that will be used will be designed around the protocols that the inverters use to communicate and semantics of the data that each voltage control research concept will require. The hardware components that may be needed are small electronic devices with integrated software components that will perform the tasks of overcoming potential short comings in the communications technologies that are available at each test site.

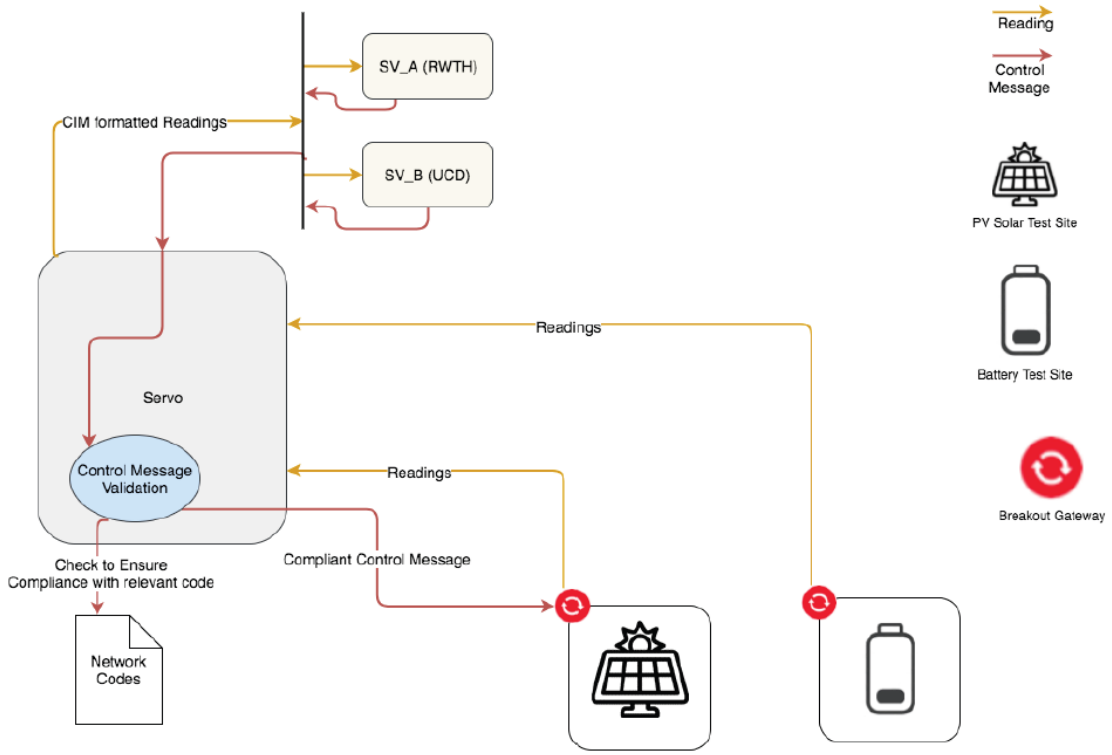

Figure 2.4: Connection of devices, methodologies, and outputs.

Other factors that will need to be considered when designing the communications models for the trial sites is the data context and latency levels required for each voltage stability research concept. In the case of both concept SV_A and SV_B the latency of the communication link is not critical. This will impact on the choice of technologies from both a software and hardware perspective and also on the choice of communications protocol that will be used. In the sections below a more detailed specification and description of the communications model will be provided. While there are fundamental differences between each test site, it is imperative to fledge the similarities where practical especially surrounding the ICT integration of components. This will enable the application services upstream from the test sites to share a common technologies and techniques. One example, where this would be evident is in the use of a common messaging technology like MQTT (http://mqtt.org/) to publish, once gathered, the readings from the target inverter to an MQTT broker. By doing this it would allow more than one research concept to subscribe to the message broker for the stream readings and enable the implementation of a common interface on the application services that provide the data for the research concepts.

2.2.1 SERVO – System Wide Energy Resource and Voltage Optimisation Platform

2.2.1.1 Summary

ESB Networks, the DSO for the Republic of Ireland, currently has disparate sources of data for its network assets, operational data and time series energy data. With the advent of Distributed Energy Resources there will be an increase in the amount of data to be collected and stored regarding parts of the network that are currently not visible. The aim of the SERVO project is to implement a software platform whereby all these sources of data are brought together to enable a multiple of use cases that will improve the efficiency of Asset Management, Network Operations and Financial outturn for the company.

SERVO is a complex project and so the project requires a high-level blueprint of the overall technology development, with projects use cases, architecture and requirements giving special attention the model capture of data from the DSO side, and the delivery of a real-time API to the SERVO Flex clients.

The requirements and use cases have been collectively defined and revised through several iterations in this first project phase. To add to this, the context viewpoint describes the environment of the SERVO system, including system stakeholders and interfaces to other systems. The requirement viewpoint deals with the description of functional and quality requirements of the SERVO system. The component viewpoint describes the decomposition of the system into components, including their interfaces, interaction, and information. The logical distribution of components is the topic of the distribution viewpoint. The realisation viewpoint deals with the realisation of the subsystems, including their deployment. In addition to the viewpoints a number of concerns with special importance to the SERVO system, e.g. security and quality-of-service are described. These concerns have special attention within all or most of the viewpoints.

2.2.1.2 Business Requirements

Currently ESB Networks has many IT systems where data about the network is stored and these are operated as stand-alone systems with no automatic data transfer between systems possible. These are:

- SCADA - ABB software solution used for system load data at substations and capturing of alarms in real time. It stores historical data that can be queried via restricted access web application
- OMS - Oracle software used in the management of the network in real time giving switch status and outage management
- Asset Register - SAP module that holds information on all assets deployed including asset type, how long in service and maintenance schedules
- Demand data - MV90 is the data collector software employed to read the profile metering employed in all large customers and at transmission/Distribution interface.
- Network Topology - Intergraph GIS system that holds the steady state network model with its geographical location

With the advent of distributed energy resources on the network other sources of data will become available that will need to be captured. These are:

- Sensors - increased use of sensors on the network will provide more time series or status data that needs to be captured
- Weather - real time weather data (temperature, wind speed etc.) will need to be captured
- Customer - more detailed information from Smart meter deployment down to domestic customer level.
- Generator - distributed connected generation (solar PV, wind) data will need to be collected for impact analysis on network.
- Aggregator – two way communication between ESB and aggregators will need to be established to allow market participation.

The aim of the SERVO platform is to provide a single resource for all this data and thus to release the potential this offers to the business not only operationally but financially by better informing investment decisions.

SERVO is not only a data repository, it also delivers external facing interfaces to allow stakeholders to interact with ESB Networks in areas such as capacity management, load control etc.
SERVO consists of three modules each interlinked that take inputs from existing ESB Networks systems and feed outputs to third parties such as DSO, TSO, Aggregators and Market Operator.

1. SERVO Modeler is the data gathering and storage module that provides a central location for all Network data from assets employed to network topology to switch status to time series data of energy flowing through the network. SERVO Modeler has been developed based on IEC 61850 and CIM model representation of the Network
2. SERVO Live is the engine of the SERVO Platform that continually assesses the available capacity of the network by using the data from SERVO Modeler. With near real time data it can calculate the network state and available capacity that is the input to the SERVO Flex module.
3. SERVO Flex is the outward facing module of the SERVO platform and acts as the interface between the SERVO Platform and third parties such as TSO and Aggregators. It is through SERVO Flex that network capacity is advertised, requested and procured from the Market.

Figure 2.5 below gives a view of how SERVO is structured and how it interacts with other systems/parties;

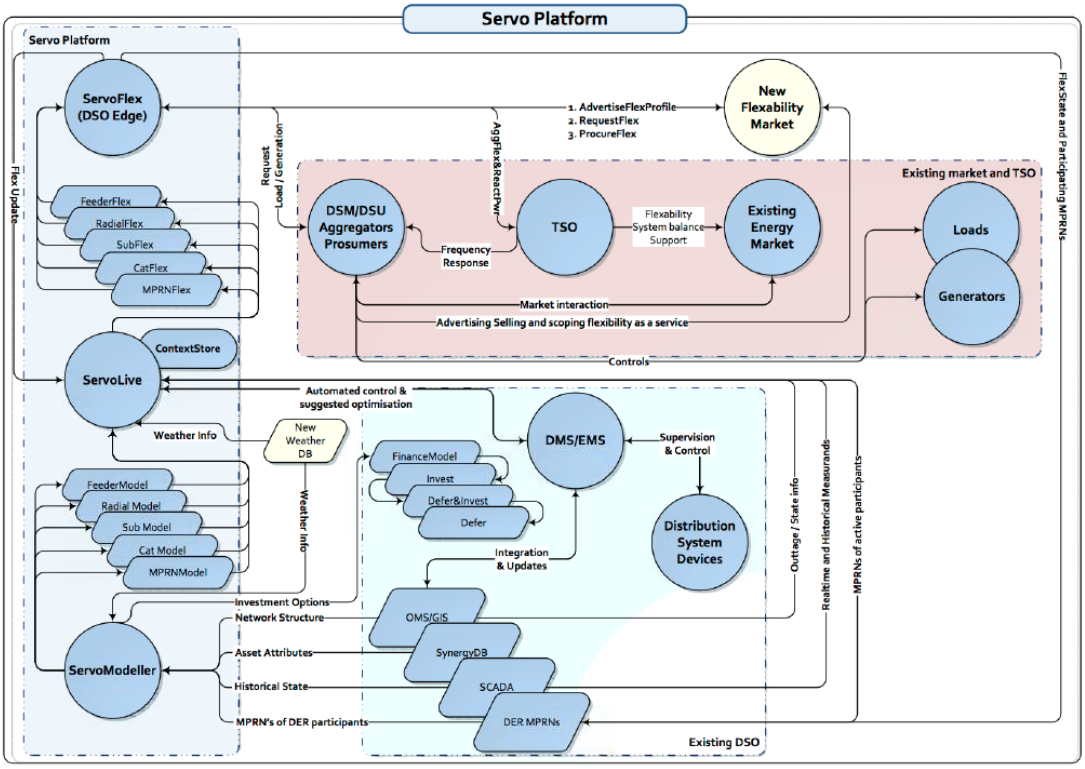

Figure 2.5: SERVO High Level Architecture

2.2.1.3 Architecture

As a multitude of different data based propositions and proposals are developed within DSO's it becomes apparent that common data sets contain information which is core to realising

answers and insight. To fully unlock and enable agile development of use cases and tie disparate data sets together it is necessary to adopt a model based approach for both data and development of code. To deliver a system that meets our requirements we investigated multiple possible software platforms to get a single system that met all our requirements. To date this does not exist, however the standards and models discussed above do. With this in mind ESB set about understanding be most applicable model appropriate to adopt in the areas of software development and data modelling.

In order to specify the architecture we have chosen to use ARCADE (An Open Architectural Description Framework) which is a domain and technology independent architectural description framework for software intensive systems. ARCADE uses the following definitions from the ISO 42010 Systems and software engineering Architecture description [ISO-42010] for the central concepts of architecture and architectural description:

- *Architecture*: The fundamental organization of a system embodied in its components, their relationships to each other, and to the environment, and the principles guiding its design and evolution.
- *Architectural Description (AD)*: A collection of products to document an architecture. ARCADE provides a structure that ensures that the documentation of the different systems developed within SERVO, will have uniform structure and content. It also presents a list of quality related concerns that should be considered when creating an architecture, and guides us on how to document concerns of particular importance to the architecture.

2.2.1.4 Technical approach

Based upon architectural decisions, ESB has adopted the Common Information Model (CIM) as the data model of choice allowing interoperability between systems. In addition to this, ESB has developed a platform SERVO which transforms and stores existing proprietary data assets from across the DSO within an open, standardised, Object Oriented representation of CIM. This allows a single and efficient process to be implemented which can form the platform to build multiple use cases based on various differing data sets.

2.2.1.5 Use Cases

As SERVO is a repository of all Network data then multiple use cases exist today for its use plus it can serve as the basis of use cases into the future with the focus on de-carbonisation of the energy industry and its subsequent increase in the penetration of DER. A sample of these uses cases are:

1. *Real Time Network Capacity Optimisation* - Enabler for Aggregators of DER to participate in capacity market.
2. *Load Visualisation* - Web based application for Network Planners to view up to date and validated load profiles to assess Network loading for studies.
3. *Asset Reporting tool* - Increasing regulatory reporting requirements can be met on assets employed and the utilisation of these assets.
4. *LV Network Operations* - Increase visibility of the LV Network to enable LV operations to be carried out more efficiently.
5. *Voltage and Frequency Control* - Ability to offer system services to grid through real time visibility of demands on Network.

2.2.1.6 Uses within trials

While seeing multiple immediate use cases within utility business as usual activities, SERVO also meets the needs of multiple trials within ESB. One such trial is within WP5 of the RE-SERVE project. In this use case SERVO acts as a conduit through which power system models, algorithms, sensing and real-time analytics are deployed to support outputs derived within WP3 and WP4. In essence SERVO acts as the foundation platform on which voltage control trials can be implemented. It does this by taking real-time information from local substations and validating network state from back end systems in ESB's operational environment. Based on the state of sensors and information from control centres, SERVO is capable or interacting with aggregators to ensure the network is utilised as efficiently and safely as is possible.

2.2.2 Vehicle to Grid Charging (V2G) – (WIT, SW)

2.2.2.1 Summary

The first installation location within the Irish trial site involves the installation of a Vehicle to Grid bidirectional charger at ESB's offices in Leopardstown, Dublin. The procured charger has a rating of 10 kW and will be coupled to the established fleet of electric vehicles via the established CHAdeMO DC Fast Charging protocol.

Aggregation for the V2G transforms electric vehicles from simple loads on the electric grid into dispatchable energy storage resources by enabling the vehicle to send excess energy stored in its battery back to the grid upon request.

The platform gives the system operator control of the following;

- Delay charging depending on system demands
- Mange if the EV slow charges or fast charges
- Export stored capacity when required
- Engage in reactive power voltage support with and without the presence of a vehicle

The V2G Charger currently undergoing final testing at manufacturer's facility prior to deployment at the trial site. Civil works to facilitate installation at the trial site are complete.

Figure 2.6: Photograph of the EV parking place.

2.2.2.2 Communications

The V2G units provide two interface options to access the inverter, a RS485 serial port for the raw modbus data and an ethernet port that supports REST which receives requests and returns responses based on a specified list of byte codes. In the context of this trial the preferred method of connection would be with REST as the V2G unit already has a strict set of codes that it uses to perform separate functions within its feature set. This will also enable the integration to clearly define a model around each function of the unit that needs to be triggered and map the functions to the network codes where applicable. From the perspective of the physical connection a hardware component will be connected to the ethernet port of the V2G unit and that hardware component relay the requests from Servo Live for data or the request to execute a control message generated by a research concept by mapping the request to the relevant

byte code and executing the request on the V2G charger. The hardware component developed to act as a bridge could potentially involve an MQTT message broker installed on the device that would operate on a publish subscribe method.

2.2.3 Solar Photovoltaic Panel with Reactive Power Control – (WIT, SW)

2.2.3.1 Summary

The second installation location within the Irish trials involves the installation of a 7.28 kW Solar PV Array at ESB's National Training and Research Centre (NTRC). The installation will consist of two strings of solar PV panels connected to two SMA "Sunny Boy" smart solar inverters. This type of inverter allows aggregation and remote configuration/control in real time via a remote party. This allows a trial on the electric grid turning conventional PV into a dispatchable energy resource by enabling the invertor to vary its generation and also vary its voltage on the system upon request.

The platform gives the system operator control of the following,

- Fluctuate generation depending on system demands
- Engage in reactive power voltage support with and without the presence generation

The configuration of the deployment at the trial site location has been agreed with relevant stakeholders and the detailed specification for the PV Array and ancillary equipment agreed and contracted with the supplier.

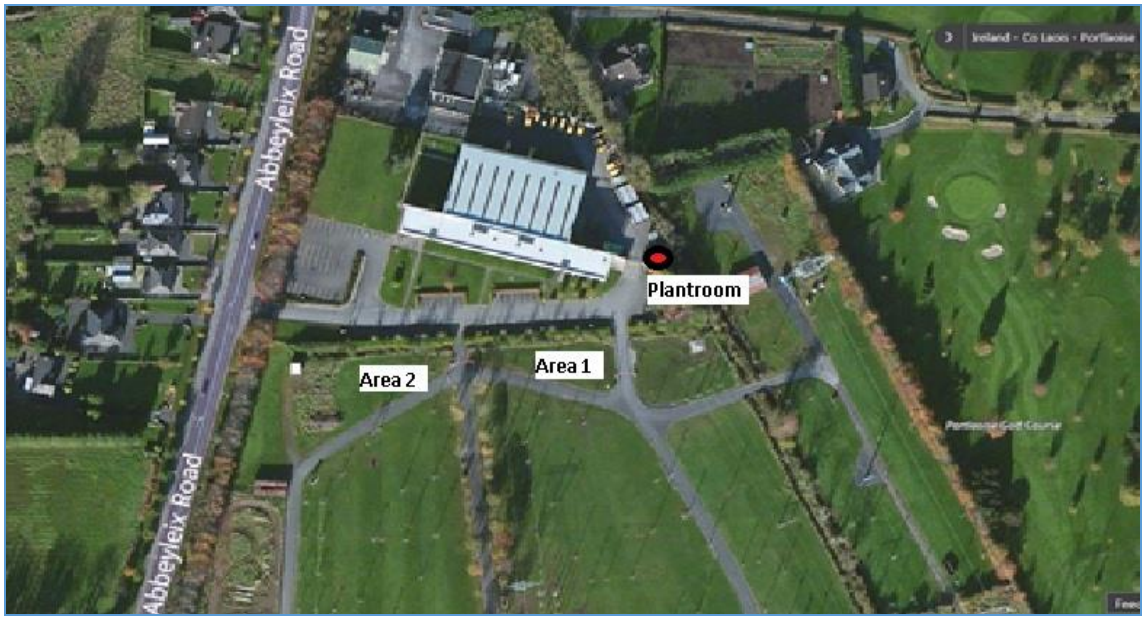

Figure 2.7: Solar PV Panel Installation Location at NTRC Portlaoise

2.2.3.2 Communications

The communications model that will be designed for this trial site will be comprised of a combination of hardware and software components. The software components that will be required to perform the functions of profiling, gathering and transmitting the readings from the inverter to the relevant services in conjunction with executing control messages. These software components will be deployed on a network enabled hardware device in the form of a Raspberry Pi (https://www.raspberrypi.org) with an integrated RS485 interfacing connector that will read the Modbus (http://www.simplymodbus.ca/faq.htm) values from the inverter. This method of connection will require the definition of a byte profile of the Modbus data stream to determine which data is relevant to the experiments and only transmit that data to the cloud for processing. The integration of an MQTT broker is required here to perform the task of publishing the readings for subscription by any relevant application service.

2.2.4 Domestic Battery Storage with Smart Grid Control – (WIT, SW)

2.2.4.1 Summary

The third Irish trial site deployment incorporates the installation of behind-the-meter battery storage devices at several locations with different customer types and use cases including a dairy farm, domestic house with existing heat pump, office complex, research institute and a fire station with existing solar PV generation.

The platform gives the system operator control of the following,

- Delay charging depending on system demands
- Guide rate of charge
- Export stored capacity when required
- Engage in reactive power voltage support

Two of the five trial site installations are complete and commissioned, one at a domestic house with heat pump and the other at a fire station with existent solar PV. Installations at other premises are scheduled for installation through Q3 and Q4 2017.

Figure 2.8: Photograph of Completed Battery Installation at Domestic House

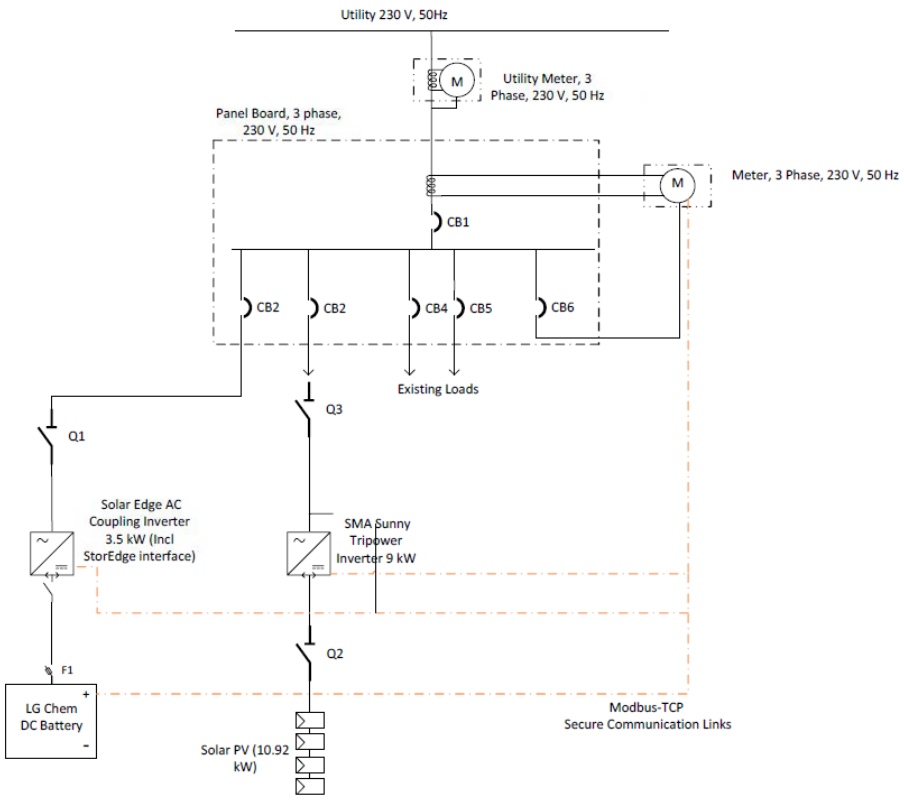

Figure 2.9: Single Line Diagram of Domestic House Installation with Battery & Solar PV

2.2.4.2 Communications

The method of communications that will be used in the instance of the Domestic Batteries will be a MQTT broker to MQTT broker set up with one broker deployed on the test site and the other deployed on a cloud environment. The decision to implement a dual broker setup in favour of a broker client setup was highly influenced by the need to not only gather the data from the test site but also to potentially execute control messages generated by the research concepts on the test site. The implementation of communications will also encompass the definition of a profile that will be applied at both the test site and cloud instance that will specify what data is required and relevant to the use cases. Defining and applying a message profile will provide a measure to ensure that messages transported between the brokers and further into the system are lightweight and do not contain any unnecessary data.

2.2.5 Air Source Heat Pump (ASHP) with Smart Grid Control – (WIT, SW)

2.2.5.1 Summary

In an effort to fully appreciate the active role electrified heat can have in system support, 5 Air Source Heat Pumps (ASHPs) will be incorporated within the trial. The controllability of inverters in heat pumps to date is not as feature rich as the technologies highlighted in previous sections. The only current method of control is via a ramping function found in the control unit. The ramping function allows for the set point of an ASHP to be ramped up by 2. For instance, if the normal state required ambient temperature were 19° C, if the ramp contact were closed, the new target value would go from 19°C to 21°C. For the purpose of the trial we will be connecting to the ASHPs via an existing electrical interface with a module which will allow remote operation of this functionality.

This will deliver the following services to parties:

- Delay operation depending on system demands
- Manage the operational mode of heat pumps
- Engage in voltage support using load

2.2.5.2 Communications

The communications model for the ASHPs will require both a software and hardware integration. The hardware integration comes in the form of a 1m2m sensor(https://www.1m2m.eu/products.php#ED1600) which interfaces with the inverter on the ASHP and transmits the readings. This particular sensor has two frequencies available for communication and both options are relevant for the purpose of this integration. One is via the SigFox frequency by which the sensor transmits the readings to the SigFox backend and when configuring the sensor with SigFox a call back is specified which would publish the readings to an MQTT broker. The other method of communication would require a LoRa integration, this method would involve the integration of an on-site device that would act as a gateway and would receive the readings from the LoRa enabled sensor and publish the readings to an MQTT message broker for subscription to by the relevant application services for analysis. The two main factors that will need to be considered in choosing which transmission method to use are, the signal strength at the test bed and also the support for a message back to the sensor via each platform.

2.2.6 Voltage Output Impedance Trial (RWTH)

In this chapter, the virtual output impedance trial to be performed within the Irish trial grid is covered. Two external inverters purchased by ESB and RWTH will have the same hardware and parameters. The input side of the inverter consists of a passive rectifier and a DC link with pre-charging routine. The inverter starts to function only after voltage build-up in the DC link reaches minimum threshold. The inverter will be pre-programmed with the power controller. An LC filter is present at the output of the inverter. In the current day scenario, inverters up to 50 kHz is possible for a power output ranging to 10 kW. Measurement device with bandwidth up to 50 kHz is also feasible.

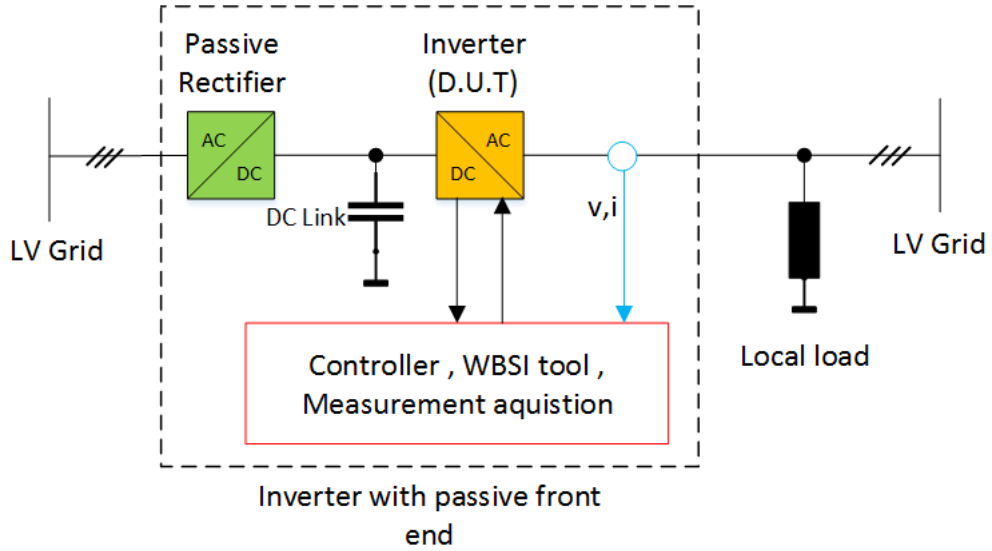

Figure 2.10: Single Line Diagram of the Sv_A Irish Field Trial

The control hardware consists of the PRBS generation algorithm, data acquisition and the power controller. When feasible, the controller hardware resources will contain the impedance calculation and fitting algorithm. The arrangement of the trial is shown in Figure 2.10. The inverter takes power from its passive front end and feeds it back into the grid. A part of the power is dissipated through the local load and the remaining power is injected into the grid. The output impedance identification will be performed for various load scenarios. The load change can be done either locally or at a farther location in the grid. Monitoring the stability margin of the inverter based on the impedance change will be an important objective of this trial.

The preparation for this trial will begin from next year. At the current stage, RWTH and ESB are looking for customised inverters which suit the application.

2.3 Wide Area Monitoring System (Transelectrica, UPB)

In Romania, the owner, operator and administrator of the transmission system is Transelectrica S.A. (Transelectrica). It is also a member of ENTSO-E (European Network of Transmission System Operators for Electricity), and makes possible the energy exchanges between the South-Eastern European countries. Transelectrica has major responsibilities [25]:

- To maintain and enhance the operating reliability of the Romanian National Electric System (SEN)
- To supervise the transmission of electric energy
- System dispatching and market operations

In Romania, the activities in the energy field are regulated by the National Regulatory Energy Agency (ANRE). The legislation consists both Energy Law and secondary legislation, which are in full agreement with the Transmission and System Operator License, Electric Transmission Network Code, Commercial Code, and the Metering Code.

The administrative unit which monitors, supervises, and controls the system and market operator is called UNO-DEN (National Dispatch Center).

With a few exceptions, that belong to the “stability constrained transmission corridors”, the 110 kV lines are under the jurisdiction of the distribution companies. A diagram of the Romanian transmission system, which is interconnected with the power systems of Ukraine, Moldova, Hungary, Serbia and Bulgaria is shown in Figure 2.11.

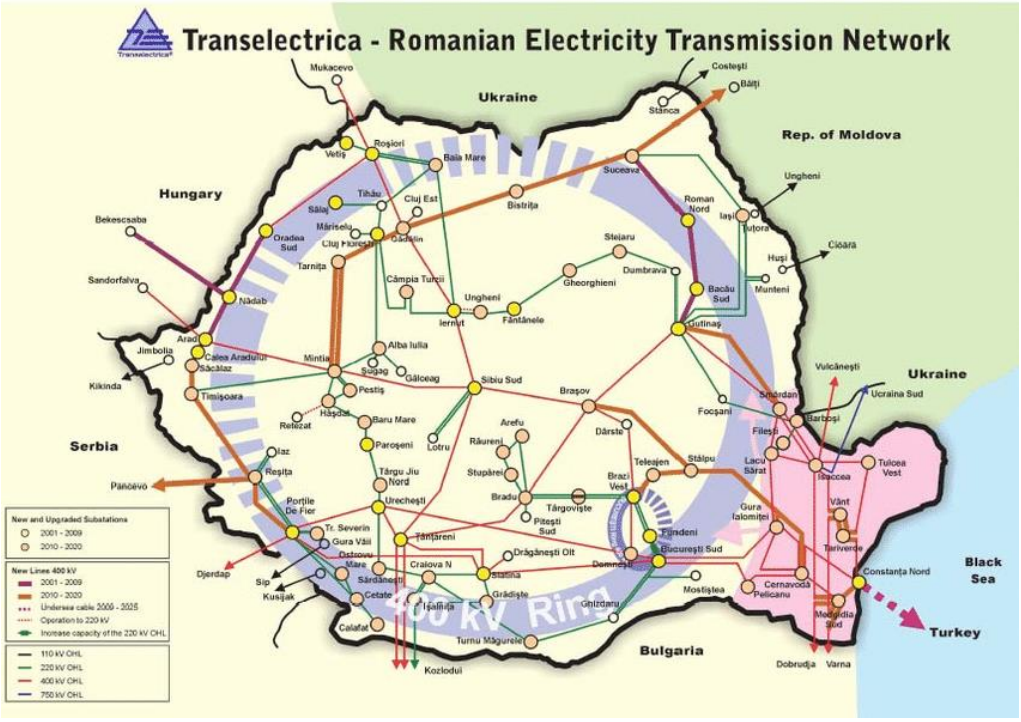

Figure 2.11: Romanian transmission network including new 400 kV lines.

In order to solve the problem of major power system disturbance, protection, control and automation systems, a WAMPC has been developed complementary to the conventional local protection equipment and to the SCADA/EMS system. Because it is not possible to predict or prevent all the possible contingencies which may cause a large power system disturbance, it is necessary a system that provides a reliable security prediction and optimized coordinated actions. Such a system is the Wide Area Monitoring and Control [26].

PMUs are installed in the following substations: Roșiori, Iernut, Brașov, Mintia, Nădab, Arad, Gutinaș, Țânțăreni, Porțile de Fier, București Sud, Isaccea, Cernavodă, and most recently in Rahman and Stupina.

In modern electric power systems, synchronized measurements have become a common feature. Time-synchronized samples are used to calculate a variety of quantities such as voltage and current phasors or power. Due to their relationship to power flows, the relative voltage phase angles among substations are some of the most important measurements. The implementation of PMUs facilitates the relative phase angle measurement.

Wide Area Monitoring Systems are essentially based on a new data acquisition technology. The main idea is the centralized processing of the data collected from different locations of a power system, in order to estimate the actual power system operation conditions with respect to its stability limits. Unlike conventional control systems, where the acquisition of data consists of RMS values of currents and voltages, in a WAM system the acquired data is composed of synchronized currents, voltages phasors and frequency, which are measured by the PMUs. The measured quantities include both magnitudes and phase angles, and they are time-synchronized via the GPS receivers with an accuracy of some microseconds [26].

The WAM system architecture is based on the following hardware:

- Phasor Measurement Units (PMUs)
- Communication Links
- A System Monitoring Center (SMC) to collect data and run tailored applications

For allowing observability of the power system under any operational conditions (network islanding, outage of lines, outage of generators, etc.), the PMUs are placed in the substations. This action involves taking into account a certain degree of redundancy to provide secure information in case of unavailability of some data (PMU and/or communication links failure, etc.). The SMC receives the measured data via dedicated communication channels/links. The SMC is represented by a central computational unit, where the collected measurements are synchronized and sorted, yielding a snapshot of the power system state.

Voltage and/or current phasors (amplitude and angle) that are synchronized with GPS time stamping with 1.0 μs accuracy are simultaneously measured by each PMU. The data from all connected PMUs are collected, synchronized and archived by the Power Data Concentrator (PDC) function and served with minimum latency to other client application for display, analysis and control. Data latency, the time from measuring and time tagging the data at the PMU to the delivery of synchronized data to the application, is determined by the PMU processing, network bandwidth, collecting and synchronizing system PMU data by the PDC and serving the data to the application. Latency is a critical issue when considering the real time system analysis and control with synchrophasor data [26].

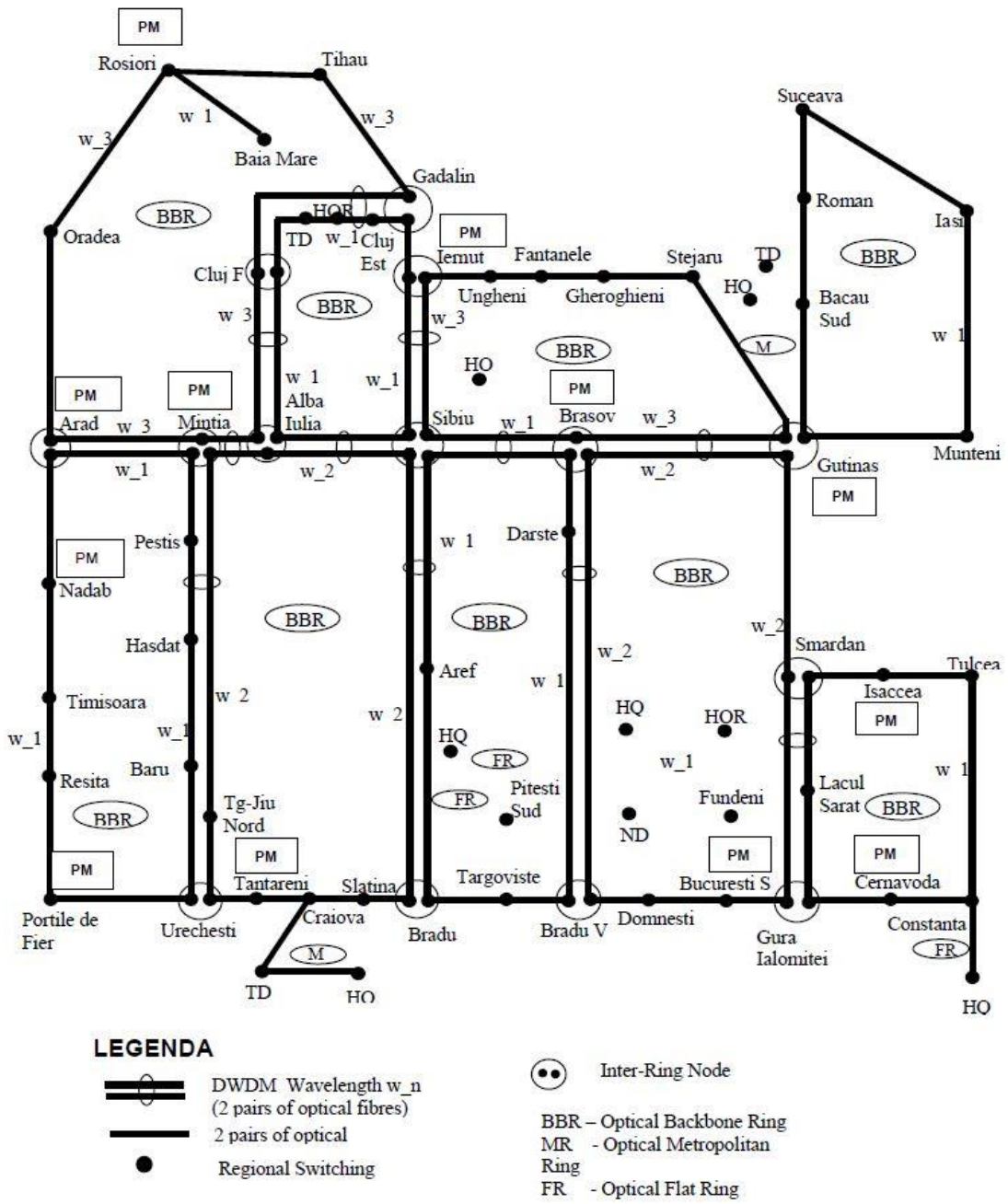

Figure 2.12: The SDH network [26]

System frequency or voltages instability can appear due to system contingencies, when the power system is operating closer to its stability limits. This is why a more accurate monitoring is needed. The dynamic behavior of the power system depends on actual network topology, load balance, current flows in and out of the critical sections, and generation unit's location in the network and type and control systems of these units. In Romania, in order to improve the power system monitoring a pilot project was commissioned using 12 PMUs installed in key transmission substations and of a phasors data concentrator at the National Control Center (NCC) location. First, the cross-border lines and substations close to large scale generating units were chosen for phasor monitoring. In Figure 4 are presented the communication links, which take advantage of the already existing SDH system [26].

The actual application includes:

- Improvement of Power System Observability
- Detection of power system oscillations
- Data visualization and data archiving

- Line parameters calculations and model validation
- State estimator validation

Each substation cabinet includes a PMU, a GPS receiver and a switch which connects the PMU to an Ethernet over E1 converter through a media converter. Further on, the SDH equipment installed in each substation, belonging to the FO Backbone, transports the information provided by the related PMU to the central WAM system installed in the NCC. The communication architecture is shown in Figure 2.13.

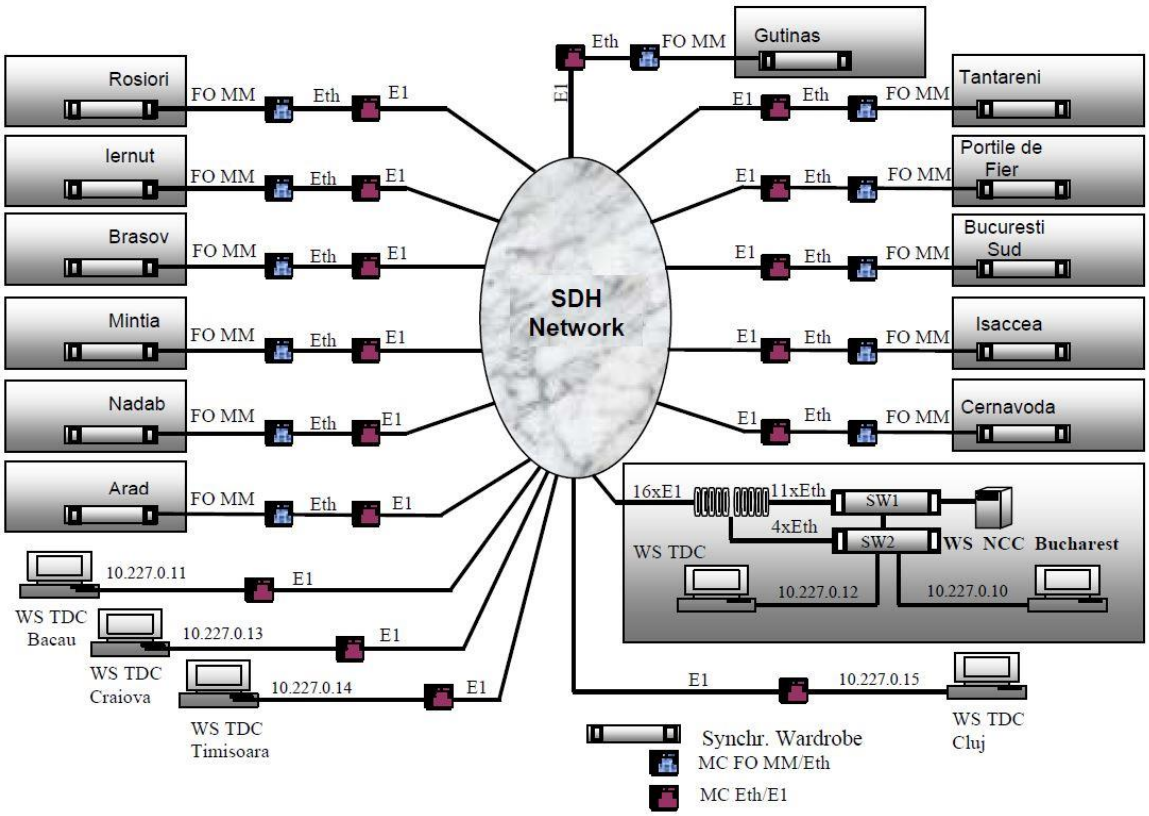

Figure 2.13: Communication architecture for synchronized phasor measurement [26]

To detect abnormal system conditions and take preplanned, corrective actions intended to minimize the risk of wide-area disturbances and to increase system power transfer capability, as well as its reliability, a WAPPC system must be developed. This means that contingencies or critical events should not lead to a system wide critical situation or even to a system collapse. Both identification and actions shall be monitored, and the actions shall be taken, dependent on the time frame of the event, automatically.

Wide area protection applications must distinguish between the following physical phenomena[26]:

- Transient angle instability (first swing)
- Small signal angle instability (damping)
- Frequency instability
- Short-term voltage instability
- Long-term voltage instability

Nowadays, the SCADA/EMS system is not able to catch the dynamics of the system and is therefore focused on the steady state operational requirements. The major requirements for a wide area protection system are:

- Dynamic measurement and representation of events
- Coordinated and optimized stabilizing actions
- Wide area system view
- Handling of cascaded outages

2.4 Optimal Power Flow (OPF) (UCD)

Optimisation is a branch of mathematics concerned with maximising or minimising a function subject to imposed constraints. Quantities within an optimisation problem are defined as either *parameters* that take on a fixed value or *variables* that are free to change. Every optimisation problem includes three major components; an *objective function*, *decision variables*, and *constraint equations*. The objective function defines which variable is to be optimised, either minimised or maximised. Decision variables are controllable values that are solved for in the optimisation of the objective function. A constraint equation is made up of parameters and variables, it defines the limitation on the values that a decision variable can take. A mathematical solver is typically employed for larger problems whereby a numerical method is used to navigate the solution space defined by the constraint equations to ascertain the optimal value of the objective function.

Optimal Power Flow (OPF) is an optimisation problem applied to the equations governing power flow. Examples of *parameters*, the fixed quantities of an OPF, include the impedance of lines and the topology of a network. Parameters are usually known prior to solving the conditions of the OPF. The *variables* within an OPF are the changeable quantities that are manipulated within the convergence of the OPF solution, examples include the busbar voltage magnitude and voltage angle.

Constraint equations are formulations of parameters and variables that constrain the power flow problem to operate in steady state. Constraint equations can be expressed as either an equality or inequality. Every OPF obeys Kirchhoff's Current Law, which states that the sum of currents into a node must equal zero. Using an equality constraint for every node on the network dictates that this electrical phenomenon is upheld. Inequality constraints are used where a variable may take on a value within a range, for example the bus voltage magnitudes are to be operated within an upper and lower bound and current flows are to be operated within rated bounds. Provided the electrical characteristics are upheld by constraint equations, a converged solution ought to represent a stable state of the network.

The general optimization problem is expressed in (2.1) - (2.3), where the constraints of an AC OPF formulation reside.

$$\min_{X} f(X) \tag{2.1}$$

$$H_n(X) \leq 0, n \in \Gamma_{ineq} \tag{2.2}$$

$$G_m(X) = 0, m \in \Gamma_{eq} \tag{2.3}$$

where, Γ is the set of all constraints, *H* and *G* are the set of inequalities and equalities for the variables *X*. The expression of quantities in this manner gives strength to the OPF approach as it provides the means to explore any desired decision variable and express countless objective functions. An OPF differs from a typical load flow calculation in that the generator node quantities, active power, and voltage are independent variables with defined ranges of stable operation. The OPF, in finding the optimal solution, seeks to determine these values to minimise (or maximise) the chosen objective function.

2.4.1 Applications of OPF

OPF is a technique that has been developing for five decades, first used as a method of determining the economic dispatch of generators [6] a feat achieved by expressing the cost of generation units. Later [2] and [3] formulated the power system operating conditions as a general mathematical programming problem. Since then progress has manifested with solutions of larger and more complex problems with the help of improved computational power [9]. In addition, the use of OPF has developed from its traditional use of minimising cost on a power system, to investigating other objectives; such as active power losses [10], the placement of components for voltage support and voltage balancing [11] and the optimal allocation of generation [12].

As increasing RES sought to connect to power systems, the ability of AC OPF to capture the reactive power capabilities of these units has been used to investigate other objective functions on MV systems; maximising distributed generation capacity [13], minimising energy losses [14], minimising reactive support from a transmission system [15], minimising active power

curtailment [16], maximising reactive support from DG [17] as well as encapsulating firm and non-firm planning applications of distributed generation [18].

2.4.2 The 3-OPF Modelling Tool

3-OPF is a tool developed by the Energy Institute at University College Dublin [19], built in Pyomo [20] and written in Python scripting language [21]. Building on the 4-conductor current flow formulation [22] and the work of [23], 3-OPF models a three-phase unbalanced optimal power flow.

3-OPF modelling approach converts the complex power produced, transferred and consumed by the equipment at each bus and phase in the network to current components. The tool has been designed in a modular manner, from study to study the components contained within the model can vary. Figure 2.14 illustrates the modular design of 3-OPF illustrating some of the modules that can be included.

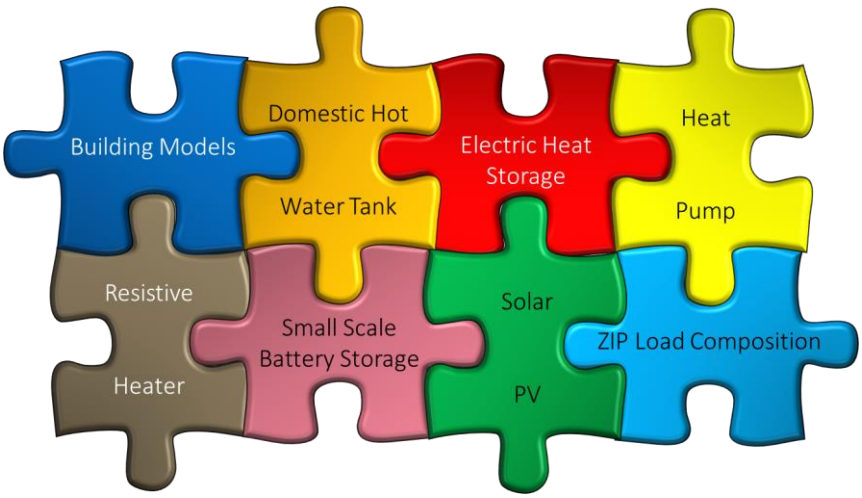

Figure 2.14: OPF modular design

For example in other work in progress for the H2020 Real Value Project [19], as well as modelling the equations of power flow on an unbalanced network, a module of 3-OPF captured the heating requirements of households. This module required detailed modelling of heat exchange and thermal embodiments of a customer premises in addition to capturing behavioural characteristics. The AVM strategy requires less of an insight into the internal temperature of households and so these modules can be switched out without affecting the core calculations of the 3-OPF. What is of importance to this study is the ZIP load composition of the demand on the feeder, the characteristics of heat pumps, photovoltaics, vehicle to grid capability and small-scale battery storage and so these modules have been developed.

2.4.2.1 Objective of AVM

The output of the 3-OPF offline modelling phase will be a selection of Volt-Var curves. The target voltage of these curves will align with unity power factor, i.e. the RES will neither inject nor absorb reactive power. An inductive power factor will be chosen to reduce the voltage should the voltage measurement at the location of RES be above the target voltage of the objective. Conversely, a capacitive power factor is chosen to raise the voltage at the terminals of the RES, should the voltage measurement present a voltage lower than the target voltage of the objective. The rate of change of reactive power with respect to the voltage deviation will be tuned and ascertained in post processing the offline modelling phase. Figure 2.15 shows an example of a droop slope illustrating the task of the 3-OPF tool, to establish the voltage setpoint and slope along which to inject and absorb reactive power.

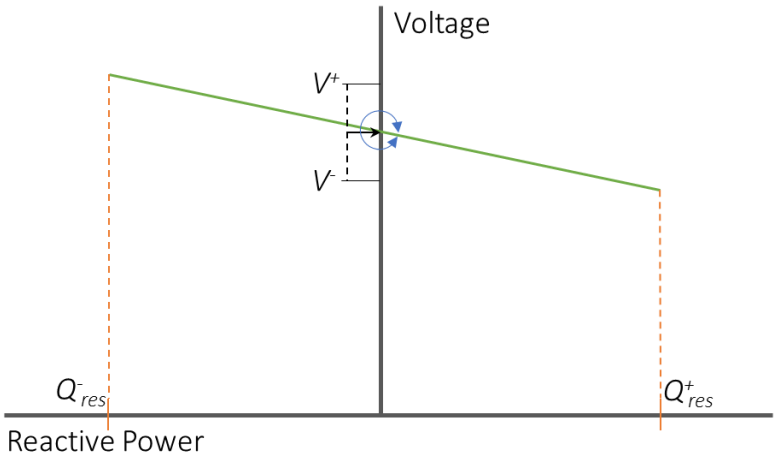

Figure 2.15: Droop slope shown with upper and lower voltage & reactive power bounds

2.4.2.2 Projected implementation in the field

In D3.2 experimental simulation will see to completion the development of the 3-OPF tool for analysis of RES on LV feeders. This will showcase how the techniques will work at a theoretical level. The AVM strategy is a two-stage approach, offline modelling and online deployment. The centralised offline modelling stage provides the environment whereby appropriate assumptions about the network can be made. A core input into the success of the trials is the accuracy of the network impedance and topology where the inverters are to be installed. The latter stage is the AVM embodiment for the field trials of WP5, using a decentralised approach that requires fitting a RES inverter with communication on a case-by-case basis.

Beyond the trial and project, future development of this AVM approach may not require offline analysis. Instead, measurements at the inverter as well further measurements along the feeder could be communicated to the DSO, whereupon a central solver could decide on appropriate actions. Given its modular design and database hierarchy the 3-OPF tool is ideally placed for this task, once sufficient measurements in the field are communicated.

What may also be revealed from the analysis of multiple-objectives and multiple feeders across a multi-period analysis, is a general solution or *rule-of-thumb* for RES setpoint configuration on any given network. These findings within the trial of WP 5 and simulations in WP 3 are aligned to link back to T3.7 and D3.7, as recommendations for alternate network codes.

3. Conclusion

This deliverable provides information about the development of the trial sites to date. These trial sites will provide the real world environment for the testing of the concepts, components and architecture of RESERVE. The delivery of the trial site will enable testing and validation of the explored concepts at later stages of the project.

The delivery of trial sites remains on track with progress made in the identification, permitting and preparation of the majority of sites completed and material delivery and specification progressed on the majority.

3.1 Relation to next deliverables and future work

This deliverable details the progress to date (M12) with regard to the planned implementation of trials both in the laboratory and in the field. The publication of initial reports D5.6 (M18) on 100% Renewables Penetration in the Irish Scenario and D5.8 (M18) on the validation of ICT concepts will extend on many aspects of this deliverable.

Documents D5.2 (M24) and D5.3 (M36) will provide additional details with regard to the further development of the trial sites together with the results of their operation, whilst the complimentary reports D5.7 (M36) and D5.9 (M36) will finalise the output of ideas developed within this deliverable with a particular focus on the scalability of the outputs identified in RESERVE.

3.2 Trial site Open Days

RESERVE has developed concepts for interactive dissemination through activities such as on-site events. A number of the Trial sites will organize Open Days focused on encouraging the participation of relevant related industries. The open days shall provide a wide industry input into the RESERVE results. They will address the entire community highlighting the validation of specific applications pf the RESERVE deliverables in a real-world context.

4. References

[1] ESB, "Distribution Code v5.0." https://www.esbnetworks.ie/docs/default-source/publications/distribution-code-v5-0.pdf?sfvrsn=6, Apr-.

[2] EN50160, "Voltage characteristics of electricity supplied by public distribution systems." 1999.

[3] M. Dietmannsberger and D. Schulz, "Impacts of Low-Voltage Distribution Grid Codes on Ancillary Services and Anti-Islanding Detection of Inverter-Based Generation," *IEEE Trans. ENERGY Convers.*, vol. 41, no. 4, pp. 1287–1294, 2016.

[4] B. I. Craciun, T. Kerekes, and D. Sera, "Overview of recent Grid Codes for PV power integration," pp. 959–965, 2012.

[5] E. Demirok, P. C. González, K. H. B. Frederiksen, D. Sera, P. Rodriguez, and R. Teodorescu, "Local Reactive Power Control Methods for Overvoltage Prevention of Distributed Solar Inverters in Low-Voltage Grids," *IEEE J. Photovoltaics*, vol. 1, no. 2, pp. 174–182, Oct. 2011.

[6] J. Carpienter, "Contribution e l'étude do Dispatching Economique," *Bull. Soc. Française Electr.*, vol. 3, 1962.

[7] H. W. Dommel and W. F. Tinney, "Optimal Power Flow Solutions," *IEEE Trans. Power App. Syst.*, vol. PAS-87, no. 10, pp. 1866–1876, 1968.

[8] C. M. Shen and M. A. Laughton, "Determination of optimum power-system operating conditions under constraints," *Proc. Inst. Electr. Eng.*, vol. 116, no. 2, pp. 225–239, 1969.

[9] M. Huneault and F. D. Galiana, "A survey of the optimal power flow literature," *IEEE Trans. Power Syst.*, vol. 6, no. 2, pp. 762–770, 1991.

[10] A. J. Wood and B. F. Wollenberg, *Power Generation, Operation, and Control*. J. Wiley & Sons, 1996.

[11] M. E. Baran and F. F. Wu, "Optimal capacitor placement on radial distribution systems," *IEEE Trans. Power Del.*, vol. 4, no. 1, pp. 725–734, Jan. 1989.

[12] N. S. Rau and Y.-H. Wan, "Optimum location of resources in distributed planning," *IEEE Trans. Power Syst.*, vol. 9, no. 4, pp. 2014–2020, Nov. 1994.

[13] G. P. Harrison and A. R. Wallace, "Optimal power flow evaluation of distribution network capacity for the connection of distributed generation," *IEE Proc. Gener. Transm. Distrib.*, vol. 152, no. 1, pp. 115–122, 2005.

[14] L. F. Ochoa and G. P. Harrison, "Minimizing Energy Losses: Optimal Accommodation and Smart Operation of Renewable Distributed Generation," *IEEE Trans. Power Syst.*, vol. 26, no. 1, pp. 198–205, 2011.

[15] L. F. Ochoa, A. Keane, and G. P. Harrison, "Minimizing the Reactive Support for Distributed Generation: Enhanced Passive Operation and Smart Distribution Networks," *IEEE Trans. Power Syst.*, vol. 26, no. 4, pp. 2134–2142, 2011.

[16] S. C. E. Jupe and P. C. Taylor, "Distributed generation output control for network power flow management," *IET Renew. Power Gener.*, vol. 3, no. 4, pp. 371–386, Dec. 2009.

[17] A. Keane, E. Diskin, P. Cuffe, D. Brooks, T. Hearne, and T. Fallon, "Reactive power support from distributed generation - Ireland's demonstration initiative," in *IEEE Power and Energy Society General Meeting, 2012*, 2012, pp. 1–5.

[18] M. Dzamarija and A. Keane, "Firm and Non-Firm Wind Generation Planning Considering Distribution Network Sterilization," *IEEE Trans. Smart Grid*, vol. 4, no. 4, pp. 2162–2173, 2013.

[19] M. Bakhtvar and A. Keane, "A study of operation strategy of small scale heat storage devices in residential distribution feeders," in *PES Innovative Smart Grid Technologies Conference Europe (ISGT-Europe), 2017 IEEE*, 2017, pp. 1–6.

[20] Pyomo, "What is Pyomo?" 2017.

[21] M. Lutz, *Learning Python*. O'Reilly, 2003.

[22] D. R. R. Penido, L. R. de Araujo, S. Carneiro, J. L. R. Pereira, and P. A. N. Garcia, "Three-Phase Power Flow Based on Four-Conductor Current Injection Method for Unbalanced Distribution Networks," *IEEE Trans. Power Syst.*, vol. 23, no. 2, pp. 494–503, May 2008.

[23] A. O'Connell and A. Keane, "Multi-period three-phase unbalanced optimal power flow," in *Innovative Smart Grid Technologies Conference Europe (ISGT-Europe), 2014 IEEE PES*, 2014, pp. 1–6.

[24] H. Campeanu, C. Erbasu, C. Aldea, "Experience with Real-Time Stability Assessment at Transelectrica", in the book "Real Time Stability Assesment in Modern Power System

Control Centers", Edited by S. Savulescu, Wiley & IEEE Press, 2009;
[25] Transelectrica Website: http://www.transelectrica.ro/sen-harta;
[26] I. Nedelcu, I.P. Viziteu, F. Balasiu, A. Miron, "From the wide area monitoring to the wide are protection in the Romanian power grid", Cigre, 2010;

5. List of Abbreviations

ASHP	Air Source Heat Pump
B2B	Business to Business
BMS	Building management system
CAPEX	Capital Expenditure
CENELEC	European Committee for Electro technical Standardization
CEP	Complex Event Processing
COTS	Commercial off-the-shelf
CPMS	Charge Point Management System
CSA	Cloud Security Alliance
EMS	Decentralised energy management system
DER	Distributed Energy Resources
DMS	Distribution Management System
DMTF	Distributed Management Taskforce
DSE	Domain Specific Enabler
DSO	Distribution System Operator
EAC	Exploitation Activities Coordinator
EMS	Energy Management System
ERP	Enterprise Resource Planning
ESB	Electricity Supply Board
ESCO	Energy Service Companies
ESO	European Standardisation Organisations
ETP	European Technology Platform
ETSI	European Telecommunications Standards Institute
FlePS	Flexible Power Simulator
FO	Fiber Optic
FPGA	Field Programmable Gate Array
GE	Generic Enabler
GPS	Global Positioning System
HEMS	Home Energy Management System
HiL	Hardware in the Loop
HV	High Voltage
I2ND	Interfaces to the Network and Devices
ICT	Information and Communication Technology
IEC	International Electro-technical Commission
IoT	Internet of Things
KPI	Key Performance Indicator
LV	Low Voltage
M2M	Machine to Machine
MPLS	Multiprotocol Label Switching
MQTT	Message Queuing Telemetry Transport
MV	Medium Voltage
NIST	National Institute of Standards and Technology
O&M	Operations and maintenance
OPEX	Operational Expenditure
OPF	Optimal Power Flow
PDC	Power Data Concentrator
PHiL	Power Hardware in the Loop
PRBS	Pseudorandom Binary Sequence
PM	Project Manager
PMT	Project Management Team
PMU	Phasor Measurement Unit
PPP	Public Private Partnership
RES	Renewable Energy Sources
QEG	Quality Evaluation Group
S3C	Service Capacity; Capability; Connectivity
SCADA	Supervisory Control and Data Acquisition
SDH	Synchronous Digital Hierarchy
SDN	Software defined Networks

SDOs	Standards Development Organisations
SET	Strategic Energy Technology
SET	Strategic Energy Technology
SG-CG	Smart Grid Coordination Group
SGSG	Smart Grid Stakeholders Group
SME	Small & Medium Enterprise
SoA	State of the Art
SON	Self Organizing Network
SS	Secondary Substation
SSAU	Substation Automation Unit
TL	Task Leader
TM	Technical Manager
TSO	Transmission and System Operator
VOI	Virtual Output Impedance
VPP	Virtual Power Plant
WAM	Wide Area Measurement
WAMPC	Wide Area Measurement Protection and Control
WBSI	Wide Band System Identification
WP	Work Package
WPL	Work Package Leader

6. List of figures